ORION.GROUP LLC
Parnykova str. 1/5, Kriukivshchyna vil.,
Kyivosvyatoshinskiy district, Kyiv region
Ukraine 08136
Phone: +380 44 507 29 94
Fax: +380 44 379 04 58
E-mail: info@oriongr.com

ТОВ ОРІОН.ГРУП
вул. Парникова 1/5, с. Крюківщина
Києво-Святошинський район,
Київська область, Україна 08136
Тел.: +380 44 507 29 94
Факс: +380 44 379 04 58
E-mail: info@oriongr.com

Passport

Säurebehälter 2500L

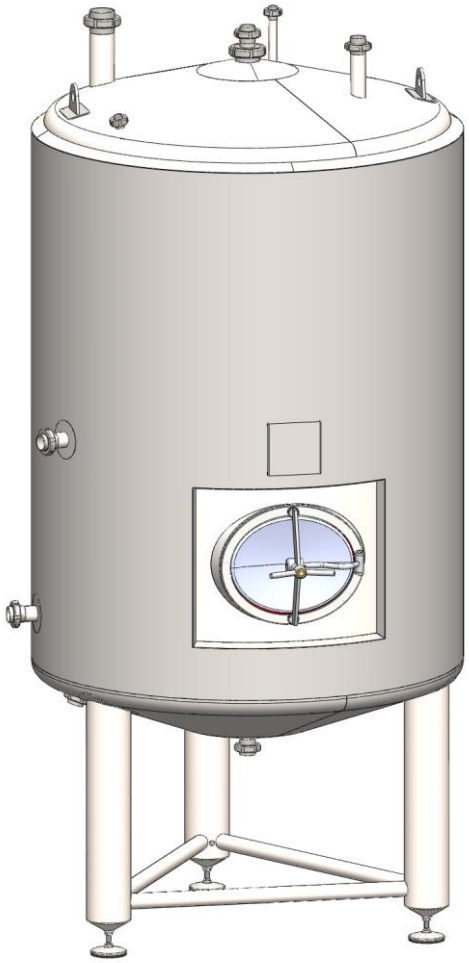

Serial number №1192
Factory drawing No: ZET2001.1192

2020

Passport Content

1 LIST OF USED STANDARDS AND MARKINGS 3
2 PRODUCT SPECIFICATION 4
2.1 Purpose 4
2.2 Customers' obligations 4
2.3 Technical information 4
3 GENERAL SAFETY RULES 6
3.1 Requirements for attending personnel 6
3.2 Safety instructions 6
3.3 Alarm behavior/ acting in case of emergency 6
4 DESCRIBING OF EQUIPMENT OPERATION 7
5 PACKAGING, SHIPPING, INSTALLATION AND MAINTENANCE INSTRUCTIONS 7
6 INSTRUCTIONS LIST 8
Instruction No. 1 – Transportation, loading/unloading instruction 9
Instruction No. 2 – Packing/unpacking instruction 10
Instruction No. 3 – Equipment storage 11
Instruction No.4 – Upright installing 12
Instruction No.10 – Mounting and commissioning instructions 13
Installation in the design position 13
Process pipelines connection 13
Equipment earthing 14
Electrical connection and earthing of the motor 14
Connecting instruments and sensors 14
Locks and alarms checking 14
Annex 1. Guarantee card 15
Annex 2. Protocol VT 16
Annex 3. Materials certificates 17

1 LIST OF USED STANDARDS AND MARKINGS

EU directives and harmonized European standards, used in the design and manufacture of capacitive equipment (hereinafter referred to as equipment):

1.1 EN 1672-2:2005+A1:2009 Food processing machinery – Basic concepts. Part 2: Hygiene requirements
1.2 EN ISO 3834 (part 2)
1.3 Regulation (EC) 1935/2004 on materials and articles intended to come into contact with food

List of used markings and their location

Warning! Danger (other dangers)
Requirements and prohibitions data for injury prevention.

Caution sign! Voltage
Indication of the danger of electric shock with live parts of the equipment or Indication of the danger of electrostatic damage of non-grounded components.

Earth sign
Used to indicate grounding points in electrical products and general-purpose devices

Caution hot surface sign
Used to indicate places where there is a probability of getting burned.

Caution hands in working areas sign
Used to indicate points where there is a chance of injury due to the hands and other parts of the body falling into moving mechanisms.

2 PRODUCT SPECIFICATION

2.1 Purpose

This vessel can be used as a tank for acid.

2.2 Customers' obligations

- ✓ Compliance and performance of all applicable national regulations;
- ✓ Compliance and performance of all standards for safety engineering, accident prevention and environmental protection;
- ✓ Compliance and performance of all admitted professional standards for reliable, technically correct operation;
- ✓ The obligation to ensure the execution of work processes, in particular the use of appropriate personal protective equipment by personnel:
  - personal protective equipment for washing and disinfecting works (rubberized gloves, glasses, face respirator and other things, which may be recommended by the applicable national regulations and the factory regulations where the equipment is installed;
  - personal protective equipment for maintenance operations (gloves, glasses, etc., which may be recommended by the applicable national regulations and the factory regulations where the equipment is installed).

  Dispose of harmful to the environment detergents in according to the applicable laws and regulations.

2.3 Technical information

Nb.	Description	Unit value
1	Product to be filled with	Acid
2	Product density, kg/m^3	1000
3	Material being in contact with product	AISI 316L
4	Work volume, m^3	2.5
5	Sizes, mm	
	Inside diameter	1400
	Max. width	1710
	Total height	3117
6	Total volume, m^3	2.96
7	Design temperature, ^{0}C	+85
8	Working temperature, ^{0}C	+20
9	Design pressure, bar	Atmospheric + hydr.
10	Working pressure, bar	Atmospheric + hydr.
11	Type of insulation	PU foam
	Thickness	40
12	Estimated weight of equipment without product, kg	440
13	Number of legs	3

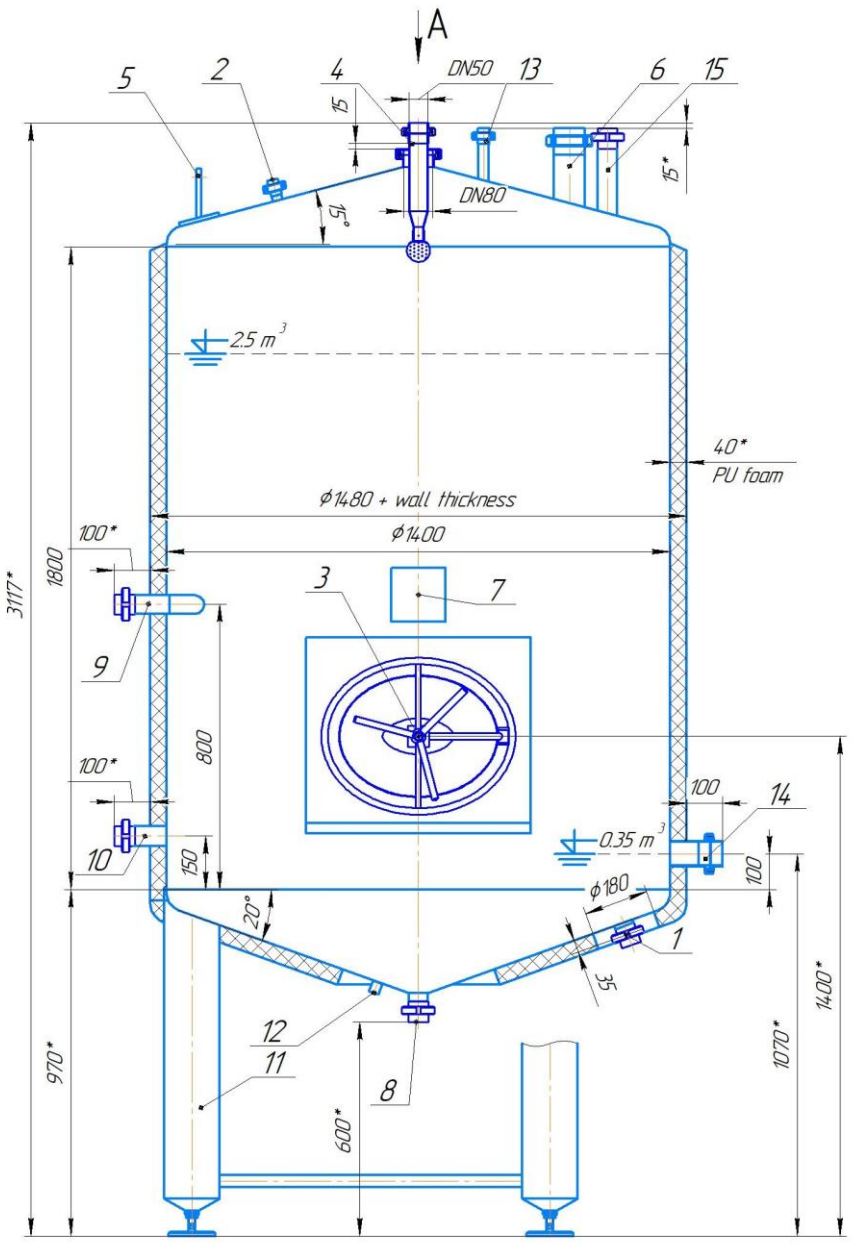
A
5
2
4
DN50
13
6
15
15
15*
15°
DN80
2.5 m³
40*
PU foam
ϕ1480 + wall thickness
ϕ1400
100*
1800
3117*
3
7
9
800
100*
100
14
0.35 m³
10
150
100
ϕ180
20°
1
35
1400*
12
11
970*
8
1070*
600*

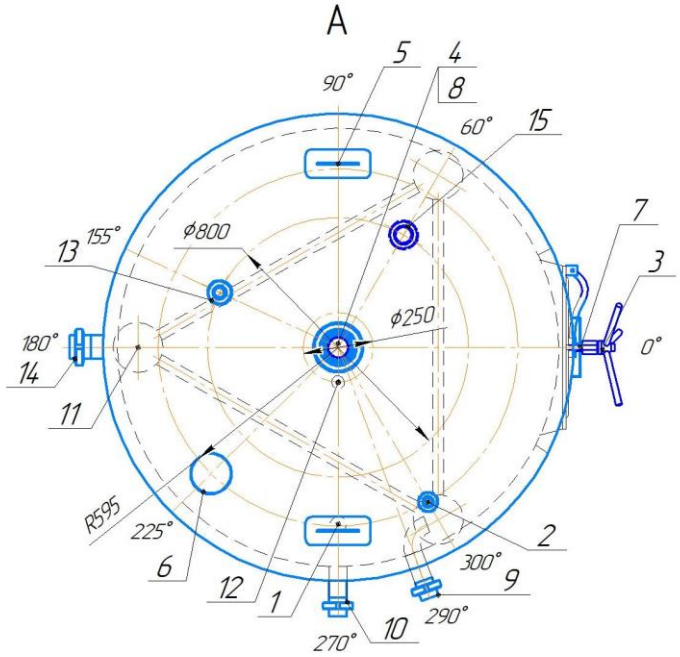
A
5
4
8
90°
60°
15
7
3
13
155°
ϕ800
ϕ250
180°
0°
14
11
R595
225°
2
6
300°
9
12
1
290°
10
270°

Nb.	Title	Size	Standard
1	Pressure	DN50	DIN11851/Orion.Group
2	Pipe for high level sensor	DN25	DIN11851/Orion.Group
3	Manhole A4	Ø340x440	Fratelli Laveggi
4	CIP node	DN50	NIOB
5	Mounting lug	-	Orion.Group
6	Airvent pipe	DN80	DIN11851/Orion.Group
7	Nameplate	-	Orion.Group
8	Outlet pipe	DN50	DIN11851/Orion.Group
9	Pipe	DN50	DIN11851/Orion.Group
10	Pipe	DN50	DIN11851/Orion.Group
11	Adjustable support	Ø154	Orion.Group
12	Adapter for temperature sensor	1/2	Orion.Group
13	Dosing pipe	DN25	DIN11851/Orion.Group
14	Pipe	DN65	DIN11851/Orion.Group
15	Backup pipe	DN50	DIN11851/Orion.Group

3 GENERAL SAFETY RULES

Attending personnel, technical staff must examine the passport and comply with the requirements and recommendations set out in it.

3.1 Requirements for attending personnel

- ✓ Installation, connection, start-up, maintenance and repair should be carried out only by trained, specially instructed, qualified personnel. Instruction must be confirmed in writing;
- ✓ work with electrical equipment should be performed exclusively by an electrician or an authorized person under the supervision of an electrician in accordance with the applicable electrical standards;

  A specialist is one who, based on his professional education, knowledge and experience, as well as knowledge of the relevant provisions, can assess the work assigned to him and determine the existing risks.
- ✓ staff must reach the legal minimum age specified for such activities in the country of use of the equipment.

3.2 Safety instructions

- ✓ use of equipment for purposes other than intended, as well as failure to comply with the requirements and recommendations set forth in the passport can lead to serious consequences regarding health, material damage and equipment failure;
- ✓ Any maintenance, repair, etc. should not be performed from stairs and ladders;
- ✓ Proximity switch on the manway shell to be connected to the automatic system in case using an agitator to protect operators;
- ✓ equipment marking must be clearly visible and readable;
- ✓ untrained and incompetent personnel are not allowed to work and maintain the equipment;
- ✓ when performing repair work:
  - perform equipment washing after production cycles;
  - turn off the power that is supplied to the driver, valves and sensors installed on the equipment;
  - install warning sign on the switch with an appropriate inscription.

3.3 Alarm behavior/ acting in case of emergency

- ✓ turn off the power on the control panel (is not included in the delivery with the equipment, mounted on site by the consumer);
- ✓ qualified, authorized personnel have to determine and eliminate the cause of the accident.

4 DESCRIBING OF EQUIPMENT OPERATION

The passport contains only recommendations that can be supplemented and modified depending on the technological processes at the factory. During the change of recommendations, follow the requirements of the Directives and Standards described in Clause 1 of the passport.

Equipment filling:

- Fill the equipment using Inlet / Outlet pipe.
- Mixing device can be can work continuously during filling or periodically, depending on the process.
- Overpressure should be controlled by automation system to protect equipment from the collapse. Keep pressure in the tank in design measuring.

The operation of the mixing device with the open manway is prohibited.

Product storage:

- Valves on the Inlet / Outlet pipe should be closed.
- Mixing device can work continuously during filling or periodically, depending on the process.

Equipment emptying:

- Emptying the equipment using Inlet / Outlet pipe.
- Mixing device can work continuously during filling or periodically, depending on the process.
- Vacuum should be controlled by automation system to protect equipment from the collapse. Keep pressure in the tank in design measuring.

Equipment clinging:

- Vent valve should be open during cleaning
- Manway should be closed to protect stuff from the chemical solution and hot water which could be used during cleaning
- Use chemical solutions which applied to be used for equipment material (stainless steel)
- Vacuum and overpressure should be controlled by automation system to protect equipment from the collapse. Keep pressure in the tank in design measuring.

5 PACKAGING, SHIPPING, INSTALLATION AND MAINTENANCE INSTRUCTIONS

The packaging, installation and maintenance of equipment, as well as its components, such as: a mixing device (if any), fencing, ladder or transitional bridges (if any), sensors (if any), are allowed to persons familiar with the instructions and passport requirements.

6 INSTRUCTIONS LIST

Title	Instruction No.	Pg.	Appliance.
Transportation, loading /unloading instruction	№1	9	+
Packing/unpacking instruction	№2	10	+
Storage instruction	№3	11	+
Upright installing	№4	12	+
Railing installation	№5		
Ladders installation instruction	№6		
Installation of the service platform between the equipment	№7		
Indicator installation instruction	№8		
Mixer installation instruction	№9		
Mounting and commissioning instruction	№10	13	+
Maintenance instruction	№11		
Emergency instruction	№12		
Safeguard measures instruction	№13		

Instruction No. 1 – Transportation, loading/unloading instruction

The equipment is supplied with a special designs transport cradles, which ensure safe transport.

The equipment is transported only on transport cradles.

For fixing on car platforms use lifting lugs, marked with a special sign (see section 1 "Information symbols and inscriptions").

The company - manufacturer is not liable for damage that occurred due to the use of third-party transport cradle, as well as during inappropriate loading / unloading.

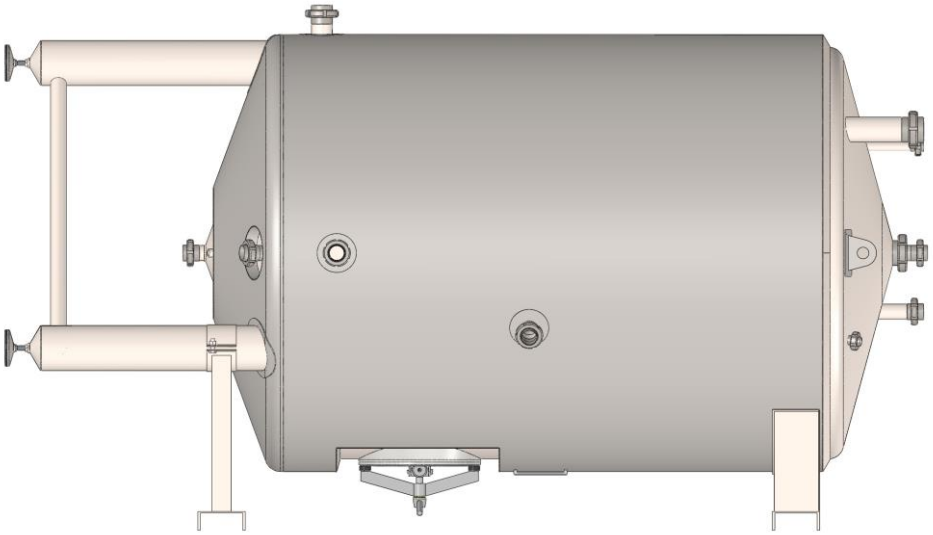

Manufactured and packed equipment can be transported by vehicles equipped with devices that preclude the movement of goods in compliance with transportation rules for this kind of transport and providing safety from damage.

Avoid contact of stainless steel materials with carbon steel materials during transportation.

Avoid sudden jolts and bumps when transporting equipment.

During loading / unloading of capacitive and additional equipment, such as stairs, service platforms, etc. (if supplied), use lifting lugs and eyebolts for lifting.

It is forbidden to load, unload, fix, using for this purpose supply pipes, flanges and other structural elements of equipment that are not intended for such types of work.

Equipment dimensional specifications:

- Length: 3117 mm.
- Width: 1596 mm.
- Height: 1830 mm.

Equipment weight:

- Gross: 480 kg.

Recommended Loading / Unloading Facilities:

- Type: Cargo crane
- Lifting power: selected by the installer

Instruction No. 2 – Packing/unpacking instruction

The equipment is supplied in protection packaging film that ensures safe transportation.

The consumer is liable for damages that have occurred due to inappropriate organization of unpacking work.

If the facility is equipped with a mixer, the drive of which is mounted on the top or bottom, then the supporting structures must be dismantled when the equipment is installed vertically in order to protect the shaft from deformation.

Subsequent packaging if required, is performed by third parties. Consumer is responsible for such packaging and for damage that may be done to the equipment during such work.

Upon receipt of the equipment it is necessary:

- Ensure there is no damage that could be done to the equipment during transportation;
- See the inscriptions and markings on the equipment;
- See the accompanying documentation, which is provided along with the cargo (passports, instructions, etc.)

After see the documentation it is necessary:

- Remove the tie bands;
- Remove the protection shrink film which covers the equipment;
- Remove all plugs that close the supply pipes, threads and manhole.

Instruction No. 3 – Equipment storage

Equipment completed with electric drives, sensors, etc. should be stored in closed warehouses or under sheds that protect from water and direct sunlight.

Equipment that is not completed with electrical equipment can be stored in open areas, but this should be protected from direct sunlight.

Consumer is responsible for damages, which occurred due to inappropriate organization of storage of equipment and components.

In the storage area of equipment and components it is prohibited to carry out work that may damage the equipment and its packaging.

It is necessary to periodically check the equipment and packaging condition, If store equipment for more than 3 months.

Instruction No.4 – Upright installing

During loading / unloading of vessels and additional equipment, use lifting lugs and eye bolts (see Instruction No.1 - Transportation, loading / unloading instruction).

It is forbidden to load, unload, fix the equipment, using pipes, flanges and other structural elements not intended for such types of work.

For upright installing, use lifting equipment and slings with a lifting capacity equal to or more than recommended.

Consumer is responsible for damages done to equipment during inappropriate organization of equipment installation work.

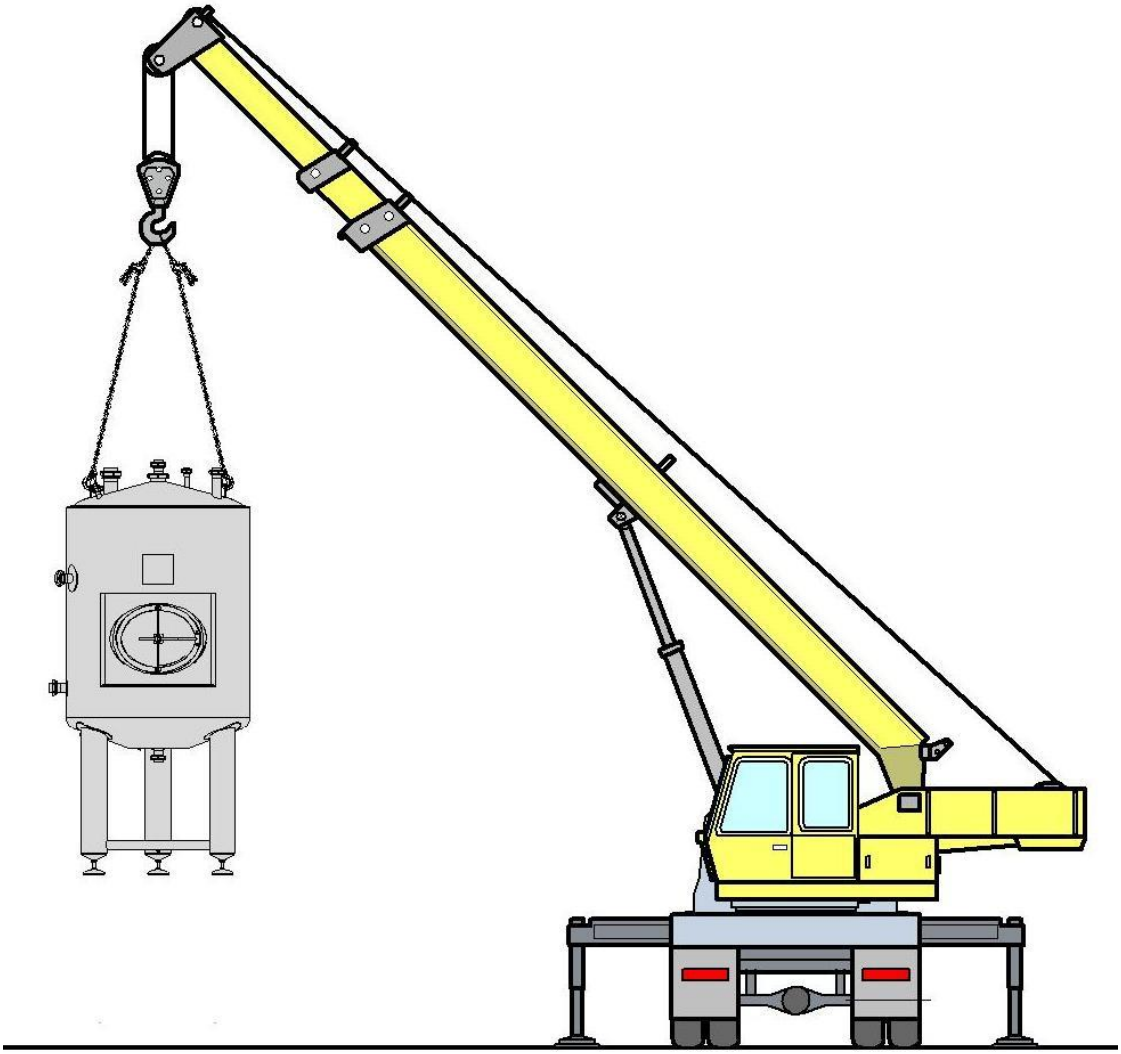

Recommended Loading / Unloading Facilities:

- Type: Cargo crane
- Lifting power: depends on distance from the loader to the place of mounting

Instruction No.10 – Mounting and commissioning instructions

Pre-starting procedure and commissioning of the equipment includes the following:

- installation in the design position;
- connection of technological pipelines;
- equipment earthing;
- connection of power supply and grounding to the electric engine***;
- connection of indicators and checking their normal operation and accuracy of indications ***;
- checking the level / filling of the liquid in the drive cup ***;
- performance of individual tests of the electric engine at idle and in the articulated state with a mixing device ***;
- interlock and alarms actuation ***;

*** - applied if this equipment is used in the equipment construction

For equipment commissioning work, attract certified personnel who have been trained in safety engineering and familiarized themselves with factory equipment documentation.

Installation in the design position

The equipment must be installed in the design position using according to the recommendation shows in the Instruction number 4 - Upright Installing.

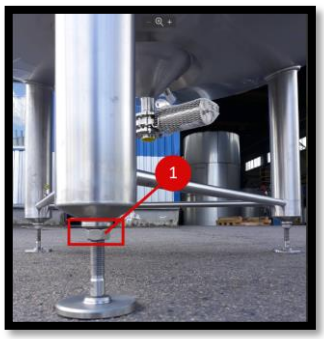

Permissible vertical deviation should be not more than 3^0. Verticality should be ensured by means of support adjustment. After adjustment, lock in using the lock-nut (1).

Process pipelines connection

Connect the pipelines using arc welding with a non-consumable electrode in inert protective gas. All works must be performed in accordance with Standards and Directives, listed in chapter 1.

Welding of pipelines to the taps and fittings tanks carried out in accordance with the technology developed by the installation company, providing the necessary requirements for cleanliness, avoiding the presence of construction dust and abrasive particles, foreign objects, etc, in the internal cavity.

Connect the flanges, clamps and other connections provided by the design of the equipment to the facility. Check the tightness of connections.

Equipment warranty will be removed in case of unauthorized changes in equipment design.

Equipment earthing

Cables should be crimped with lugs that match the cable cross section and the diameter of the grounding bolt on the equipment case. Recommended section - 8mm. Connect the ground cable to the appropriate hardware mount. Equipment earthing is mandatory.

The equipment warranty will be removed if the equipment is not properly earthed.

Electrical connection and earthing of the motor

In the case of the presence of an electric motor (s) in the construction of the equipment, make the power connection and grounding, guided by the drive passport (delivered together with Passport for equipment).

Passport is also available on the cloud. You can get access to it, using QR-code on the equipment nameplate.

Connecting instruments and sensors

In the case of the presence of instrument (s) and sensor (s) in the construction of the equipment, make the power connection and grounding, guided by the drive passport (delivered together with Passport for equipment).

Passport is also available on the cloud. You can get access to it, using QR-code on the equipment nameplate.

Locks and alarms checking

It is obligatory to check the interlocks and alarms during commissioning, for example, to turn off the mixing device when the hatch is open and to send an error signal to the operator.

Annex 1. Guarantee card

You have chosen a stainless steel equipment, made by Orion.Group LLC, Ukraine. This warranty card contains information on the conditions for granting a warranty on Säurebehälter 2500L. Detailed information and guidance on installation and maintenance are included in this Passport.

QUALITY ASSURANCE

We guarantee that the stainless steel **Säurebehälter 2500L**, serial number **1192** was tested and qualified.

09.2020

Controlled by: A. Tarasenko

GUARANTEE CONDITIONS

Guarantee period is 12 months from production date.

The guarantee is cover repairs of all factory defects, which can appear during guarantee time.

The guarantee is not related with damages caused by failure to follow recommendations presented in this passport such as: incorrect transportation, loading/unloading, transportation, installation, etc.

Annex 2. Protocol VT

ПРОТОКОЛ / PROTOCOL
№1015

Визуально-оптический контроль сварных швов Säurebehälter 2500L

Visual test of welding seams on Säurebehälter 2500L

Адрес объекта контроля (Address of the control object):
ул. Парниковая 1/5, с. Крюковщина Киевосвятошинский р-н, Киевская область
Parnykova str. 1/5, Kriukivshchyna vil., Kyivosvyatoshinskiy district, Kyiv region
Дата проведения контроля (Date of control):
09.2020

Объект контроля (Object): *Säurebehälter 2500L, №1192*
Материал (Material): *AISI 316L*
Способ сварки (Welding methods): *141, 142, 145, 153*
Типы соединений (Weld types): *FW, BW*
Объем контроля (Volume): *100% сварных соединений (100% welds).*
Конструкторская документация (Factory drawing): *ZET2001.1192*

Оборудование (equipment):
Люксметр FLUS MT-902, лупа (x3), штангенциркуль (0÷122мм), линейка (0÷300 мм), универсальный шаблон сварщика.
Lux meter FLUS MT-902, magnifier (x3), caliper (0 ÷ 122mm), ruler (0 ÷ 300 mm), universal welder template

Контроль проводился согласно (Test was carried out according to):
EN ISO 17637 «Контроль неразрушающий. Визуальный контроль соединений, выполненных сваркой плавлением».
EN ISO 17637 "Non-destructive testing. Visual inspection of the welding seams".
Критерии приёмки (Acceptance criteria):
ДСТУ ISO 5817 «Сварные соединения из стали, никеля, титана и их сплавов, полученные сваркой плавлением (исключая лучевые способы сварки)».
ДСТУ ISO 5817 "Welding seams made of steel, nickel, titanium and their alloys, obtained by welding by melting (excluding ray welding methods)."

РЕЗУЛЬТАТЫ КОНТРОЛЯ (Results):

В результате работ по проведению визуально-оптического контроля сварных швов **Säurebehälter 2500L *№1192*,** недопустимых дефектов не выявлено. Размеры швов указаны в журнале сварочных работ, и удовлетворяют требованиям ДСТУ ISO 5817, проектной и технологической документации.

As a result of work on visual inspection of welding seams on **Säurebehälter 2500L *№1192***, unacceptable defects were not detected. Dimensions of welding seams showed in Welding log, and satisfy the conditions of ДСТУ ISO 5817, design and technological documentation.

Контроль провели (Controlled by):
Специалист II уровня (Specialist II Level)
VT (№11265.VT.2/18) A. Tarasenko

Annex 3. Materials certificates

Ilta Inox S.p.A.
Strada Statale 45 bis
26010 Robecco d'Oglio (CR) - Italia
Tel + 39 0372 9801
Fax + 39 0372 921538
e-mail:sales@ilta.arvedi.it
quality@ilta.arvedi.it
www.arvedi.it

TEST CERTIFICATE ACCORDING TO EN 10204(2005) 3.1 **N°0000546149**

ABNAHMEPRÜFZEUGNIS - CERTIFICAT D'ESSAIS - CERTIFICATO DI COLLAUDO Pag. 1di 1

Longitudinally laser welded tubes/Laser längsnahtgeschweisste rohre/Tubes soudes longitudinalement laser/Tubi saldati longitudinalmente laser

Customer: Besteller/Client/Cliente: Ukrainian beer company - Selyanskaya str. 110	Armatura Ltd. 61157 Kharkov
Customer Order N°: 20180611-2 - Bestellung/Commande Client/Ordine Cliente	Mill's Ilta Inox N°: 0411073991 - 000060 # 0421079918 - 000070 WerksN°/N° référence interne/Conferma ordine
Specifications: EN 10217-7: 2014 TC1 / /EN 10357: 2014 Anforderungen/Specifications/Specifiche / / CC	Tolerances: EN 10357 TAB.1 SERIES A Toleranzen/Tolérances/Tolleranze
Manufacturer's mark: Herstellerzeichen/Marque du fabricant/ Marchio del produttore Inspector's Stamp: A.C. Stempel des Sachverständigen/Poinçon de l'inspecteur/Punzone dell'ispettore	Marking: According to EN 10357 Kenzeichnung/Marquage/Marcatura

Item Pos. N°	DIMENSIONS Abmessungen Dimensions/Dimensioni	PIECES N° Stückzahl Pièces/Pezzi	METERS Meter Mètres/Metri	WEIGHT(kg) Gewicht/Poids Peso	GRADE Werkstoff/Nuance Materiale	STANDARD CODE Normbezeichnung Designation/Designazione	EXECUTION Ausführung Execution/Esecuzione
60	70.00 X 2.00 X 6000	37	222.00	743.000	TP.316L 1.4404 Z3 CND 17-12-02 UNS S31603	X2 CrNiMo 17-12-2	W2 b

Chemical analysis acc.to: ASTM A240/ EN 10088-2/EN 10028-7 Last Edition — Schmelzanalyse/Chimique analyse/Analisi chimica

Steel making process :E/AOD — Erschmelzungsart/Procédé d'elaboration/Procedimento di elaborazione acciaio

Item N°	Manufacturer Hersteller/Fabricant/Produttore	HEAT N° Schmelze/Coulée/Colata	% C	% Si	% S	% P	% Mn	% Cr	% Ni	% Mo	% Ti	% Co	% Cu	% N
60	.....	518373	0.015	0.440	0.0010	0.038	1.150	16.820	10.090	2.010	0.007	0.180	0.290	0.039

Mechanical test acc. to tab.: 6-7 EN 10217-7 — Mechanische Prüfungen/Essais mécaniques/Caratteristiche meccaniche

Item Pos. N°	HEAT N° Schmelze Coulée Colata	HOMOLOG. Zulassung Omologation Omologazione	TEST Probe Eprouvette Provino n°		SPECIMEN SIZE Abmessung Probestab Dime. Eprouvette Dimensione provetta mm.	YIELD STRENGTH Streck-Dehngrenze Limite d'élasticité Limite di snervamento 0,2% N/mm² 1%		TENSILE STRENGTH Zugfestigkeit Résistance à traction Limite di rottura N/mm²	ELONGAT. Bruchdehnung Allongement Allungamento A5%	HARDNESS Haerte Dureté Durezza HB
REQUIREMENT Anforderungen/Exigences/Requisiti						>=190	>=225	490 - 690	>= 40.0	
60	518373		01	L	20 X 2.00	411	455	626	53.3	

Test Results — Ergebnisse der Prufungen/Résultat des essais/Risultati delle prove

Heat treatment:	Wärmebehandlung/Traitement termique/Trattamento termico
Tecnological test: EN ISO 8493: OK / ======= / ======= / ======	Technologische Prüfung/Examen technologique/Prove tecnologiche
Residual Corrosion Test acc.to : ================	Korrosionsfördernde Rückstäden/Essai residues corrosif/Prova residui corrosivi
Intergranular Corrosion Test acc.to: EN ISO 3651-2/A : OK	IK Beständigkeit/Essai corr.intergr./Prova di corrosione intergranulare
Non Destructive Test acc. to: EN ISO 10893-2/E1H: OK	Zerstörungsfreie Prüfung/Contrôle non destructif/Controllo non distruttivo
Leak Test/Hydrostatic test to: EN ISO 10893-1: OK	Dichtheitsprüfung/Essai d'étanchèité/Prova di tenuta
Uncorrect Material Test: carried out 100% no remarks	Verwechlungsprüfung/Essai P.M.I./Prova antimiscuglio
Visual and gauging control: no remarks	Besichtigung und Ausmessung/Contrôle visuel et dimensionel/Controllo visivo e dimensionale

Notes:

ROUGHNESS ON BASIC MATERIAL Ra Max. 0,8 micron. ROUGHNESS ON WELDING ZONE Ra Max. 1,6 micron. - Material fully conform to type: 1.4401/316

We certify that the delivered products comply with the specification of the order / Wir bestaetigen, dass die gelieferte Ware den Bestellvorschriften entspricht / Nous attestons que les produits livres sont conformes aux réferences de la commande / Noi attestiamo che il materiale spedito è conforme ai requisiti dell'ordine

Ing. Alessandro Canevari

Robecco d'Oglio, 15/06/2018
D

Mill's Inspector / Der Werksachverständige
Inspecteur de l'usine / Firma Ispettore

Arvedi

Ilta Inox S.p.A.
Strada Statale 45 bis
26010 Robecco d'Oglio (CR) - Italia

Tel + 39 0372 9801
Fax + 39 0372 921538
e-mail:sales@ilta.arvedi.it
quality@ilta.arvedi.it
www.arvedi.it

TEST CERTIFICATE ACCORDING TO EN 10204(2005) 3.1 N°0000599136

ABNAHMEPRÜFZEUGNIS - CERTIFICAT D'ESSAIS - CERTIFICATO DI COLLAUDO Pag. 1di 1

Longitudinally laser welded tubes/Laser längsnahtgeschweisste rohre/Tubes soudes longitudinalement laser/Tubi saldati longitudinalmente laser

Customer: Besteller/Client/Cliente: Ukrainian beer company - Selyanskaya str. 110	Armatura Ltd. 61157 Kharkov
Customer Order N°: 20190612 - Bestellung/Commande Client/Ordine Cliente	Mill's Ilta Inox N°: 0411085317 - 000010 # 0421092867 - 000010 WerksN°/N° référence Interne/Conferma ordine
Specifications: EN 10217-7: 2014 TC1 / /EN 10357: 2014 Anforderungen/Specifications/Specifiche	Tolerances: EN ISO 1127 D4/T3 Toleranzen/Tolérances/Tolleranze
Manufacturer's mark: iltainox Herstellerzeichen/Marque du fabricant/ Marchio del produttore Inspector's Stamp: A.C. Stempel des Sachverständigen/Poinçon de l'inspecteur/Punzone dell'ispettore	Marking: According to EN 10357 Kenzeichnung/Marquage/Marcatura

Item Pos. N°	DIMENSIONS Abmessungen Dimensions/Dimensioni	PIECES N° Stückzahl Pièces/Pezzi	METERS Meter Mètres/Metri	WEIGHT(kg) Gewicht/Poids Peso	GRADE Werkstoff/Nuance Materiale	STANDARD CODE Normbezeichnung Designation/Designazione	EXECUTION Ausführung Execution/Esecuzione
10	28.00 X 1.50 X 6000	91	546.00	524.000	TP.316L 1.4404 Z3 CND 17-12-02 UNS S31603	X2 CrNiMo 17-12-2	W0 b

Chemical analysis acc.to: ASTM A240/ EN 10088-2/EN 10028-7 Last Edition Schmelzanalyse/Chimique analyse/Analisi chimica

Steel making process :E/AOD Erschmelzungsart/Procède d'elaboration/Procedimento di elaborazione acciaio

Item N°	Manufacturer Hersteller/Fabricant/Produttore	HEAT N° Schmelze/Coulée/Colata	% C	% Si	% S	% P	% Mn	% Cr	% Ni	% Mo	% Ti	% Co	% Cu	% N
10	.....	1810J0390	0.022	0.240	0.0040	0.042	1.720	16.660	10.080	2.040		0.100		0.053

Mechanical test acc. to tab.: 6-7 EN 10217-7 Mechanische Prüfungen/Essais mécaniques/Caratteristiche meccaniche

Item Pos. N°	HEAT N° Schmelze Coulée Colata	HOMOLOG. Zulassung Omologation Omologazione	TEST Probe Eprouvette Provino n°		SPECIMEN SIZE Abmessung Probestab Dime. Eprouvette Dimensione provetta mm.	YIELD STRENGTH Streck-Dehngrenze Limite d'élasticité Limite di snervamento 0,2% N/mm² 1%		TENSILE STRENGTH Zugfestigkeit Résistance à traction Limite di rottura N/mm²	ELONGAT. Bruchdehnung Allongement Allungamento A5%	HARDNESS Haerte Dureté Durezza HB
REQUIREMENT Anforderungen/Exigences/Requisiti						>=190	>=225	490 - 690	>= 40.0	
10	1810J0390		01	L	125.09	475	531	681	49.5	

Test Results Ergebnisse der Prufungen/Résultat des essais/Risultati delle prove

Heat treatment:	Wärmebehandlung/Traitement termique/Trattamento termico
Tecnological test: ====== / ====== / EN ISO 8492: OK / ======	Technologische Prüfung/Examen technologique/Prove tecnologiche
Residual Corrosion Test acc.to : ==========	Korrosionsfördernde Rückstäden/Essai residues corrosif/Prova residui corrosivi
Intergranular Corrosion Test acc.to: EN ISO 3651-2/A : OK	IK Beständigkeit/Essai corr.intergr./Prova di corrosione intergranulare
Non Destructive Test acc. to: EN ISO 10893-2/E1H: OK	Zerstörungsfreie Prüfung/Contrôle non destructif/Controllo non distruttivo
Leak Test/Hydrostatic test to: EN ISO 10893-1: OK	Dichtheitsprüfung/Essai d'étanchéité/Prova di tenuta
Uncorrect Material Test: carried out 100% no remarks	Verwechlungsprüfung/Essai P.M.I./Prova antimiscuglio
Visual and gauging control: no remarks	Besichtigung und Ausmessung/Contrôle visuel et dimensionel/Controllo visivo e dimensionale

Notes:

ROUGHNESS ON BASIC MATERIAL Ra Max. 0,8 micron. ROUGHNESS ON WELDING ZONE Ra Max. 1,6 micron. - Material fully conform to type: 1.4401/316

We certify that the delivered products comply with the specification of the order / Wir bestaetigen, dass die gelieferte Ware den Bestellvorschriften entspricht / Nous attestons que les produits livres sont conformes aux réferences de la commande / Noi attestiamo che il materiale spedito è conforme ai requisiti dell'ordine

Ing. Alessandro Canevari

Robecco d'Oglio, 11/07/2019
D

Mill's Inspector / Der Werksachverständige
Inspecteur de l'usine / Firma Ispettore

Arvedi

Ilta Inox S.p.A.
Strada Statale 45 bis
26010 Robecco d'Oglio (CR) - Italia

Tel + 39 0372 9801
Fax + 39 0372 921538
e-mail:sales@ilta.arvedi.it
quality@ilta.arvedi.it
www.arvedi.it

TEST CERTIFICATE ACCORDING TO EN 10204(2005) 3.1

N°0000539951

ABNAHMEPRÜFZEUGNIS - CERTIFICAT D'ESSAIS - CERTIFICATO DI COLLAUDO Pag. 1di 1

Longitudinally laser welded tubes/Laser längsnahtgeschweisste rohre/Tubes soudes longitudinalement laser/Tubi saldati longitudinalmente laser

Customer: UBC Logistyka Trans Sp. z o. o. Besteller/Client/Cliente ul. Bierutowska 57/59 51-317 Wroclaw	
Customer Order N°: 20180126 - Bestellung/Commande Client/Ordine Cliente	Mill's Ilta Inox N°: 0411069745 - 000090 # 0421077704 - 000080 WerksN°/N° référence interne/Conferma ordine
Specifications: EN 10217-7: 2014 TC1 / /EN 10357: 2014 Anforderungen/Specifications/Specifiche / / CC	Tolerances: EN ISO 1127 D4/T3 Toleranzen/Tolérances/Tolleranze
Manufacturer's mark: Herstellerzeichen/Marque du fabricant/ Marchio del produttore Inspector's Stamp: A.C. Stempel des Sachverständigen/Poinçon de l'inspecteur/Punzone dell'ispettore	Marking: According to EN 10357 Kenzeichnung/Marquage/Marcatura

Item Pos. N°	DIMENSIONS Abmessungen Dimensions/Dimensioni	PIECES N° Stückzahl Pièces/Pezzi	METERS Meter Mètres/Metri	WEIGHT(kg) Gewicht/Poids Peso	GRADE Werkstoff/Nuance Materiale	STANDARD CODE Normbezeichnung Designation/Designazione	EXECUTION Ausführung Execution/Esecuzione
90	52.00 X 1.50 X 6000	61	366.00	667.000	TP.316L 1.4404 Z3 CND 17-12-02 UNS S31603	X2 CrNiMo 17-12-2	W2 b

Chemical analysis acc.to: ASTM A240/ EN 10088-2/EN 10028-7 Last Edition Schmelzanalyse/Chimique analyse/Analisi chimica

Steel making process :E/AOD Erschmelzungsart/Procédé d'elaboration/Procedimento di elaborazione acciaio

Item N°	Manufacturer Hersteller/Fabricant/Produttore	HEAT N° Schmelze/Coulée/Colata	% C	% Si	% S	% P	% Mn	% Cr	% Ni	% Mo	% Ti	% Co	% Cu	% N
90	.....	517195	0.022	0.520	0.0010	0.028	1.490	16.680	10.030	2.010	0.011	0.220	0.440	0.042

Mechanical test acc. to tab.: 6-7 EN 10217-7 Mechanische Prüfungen/Essais mécaniques/Caratteristiche meccaniche

Item Pos. N°	HEAT N° Schmelze Coulée Colata	HOMOLOG. Zulassung Omologation Omologazione	TEST Probe Eprouvette Provino n°		SPECIMEN SIZE Abmessung Probestab Dime. Eprouvette Dimensione provetta mm.	YIELD STRENGTH Streck-Dehngrenze Limite d'élasticité Limite di snervamento 0,2% N/mm² 1%		TENSILE STRENGTH Zugfestigkeit Résistance à traction Limite di rottura N/mm²	ELONGAT. Bruchdehnung Allongament Allungamento A5%	HARDNESS Haerte Dureté Durezza HB
REQUIREMENT Anforderungen/Exigences/Requisiti						>=190	>=225	490 - 690	>= 40.0	
90	517195		01	L	20 X 1.50	402	444	612	52.4	

Test Results Ergebnisse der Prufungen/Résultat des essais/Risultati delle prove

Heat treatment:	Wärmebehandlung/Traitement termique/Trattamento termico
Tecnological test: ===== / ===== / EN ISO 8492: OK / =====	Technologische Prüfung/Examen technologique/Prove tecnologiche
Residual Corrosion Test acc.to : ==========	Korrosionsfördernde Rückständen/Essai residues corrosif/Prova residui corrosivi
Intergranular Corrosion Test acc.to: EN ISO 3651-2/A : OK	IK Beständigkeit/Essai corr.intergr./Prova di corrosione intergranulare
Non Destructive Test acc. to: EN ISO 10893-2/E1H: OK	Zerstörungsfreie Prüfung/Contrôle non destructif/Controllo non distruttivo
Leak Test/Hydrostatic test to: EN ISO 10893-1: OK	Dichtheitsprüfung/Essai d'étanchèité/Prova di tenuta
Uncorrect Material Test: carried out 100% no remarks	Verwechlungsprüfung/Essai P.M.I./Prova antimiscuglio
Visual and gauging control: no remarks	Besichtigung und Ausmessung/Contrôle visuel et dimensionel/Controllo visivo e dimensionale

Notes:

ROUGHNESS ON BASIC MATERIAL Ra Max. 0,8 micron. ROUGHNESS ON WELDING ZONE Ra Max. 1,6 micron. - Material fully conform to type: 1.4401/316

We certify that the delivered products comply with the specification of the order / Wir bestaetigen, dass die gelieferte Ware den Bestellvorschriften entspricht / Nous attestons que les produits livres sont conformes aux réferences de la commande / Noi attestiamo che il materiale spedito è conforme ai requisiti dell'ordine

Ing. Alessandro Canevari

Robecco d'Oglio, 07/05/2018
D

Mill's Inspector / Der Werksachverständige
Inspecteur de l'usine / Firma Ispettore

Arvedi

A04

aperam

Correspondentieadres:
Aperam Genk
Swinnenwijerweg 5, Poort Genk 7523
3600 Genk, Belgium
Tel. +32 (0)89 30 21 11

A01

MILL CERTIFICATE BS EN 10204/3.1
CERTIFICAT DE RECEPTION NF EN 10204/3.1
ABNAHMEPRUEFZEUGNIS DIN EN 10204/3.1

A02

N-Nr-N **20K0005255-01 V01** A03

Z05

Manufacturer's works order number
N° de la commande usine productrice
Werksauftragsnummer
80548937/04-00581/001/04 A08

Surveyor's mark
Cachet de l'expert
Stempel des
Werkssachverstaendigen
GNK1 Z03

Purchaser and/or consignee
Client et/ou destinataire
Besteller und/oder Empfaenger

ORION GROUP LLC
INSTYTUTSKA ST 15/5

10210 KYIV
UKRAINE

A06

Purchaser's order number
N° de commande client
Kundenbestellnummer
UKKVORN001 A07

Product - Produit - Erzeugnis
COIL, COLD ROLLED, FINISH 2 B
COIL, LAMINE A FROID, FINI 2 B
COIL,KALTGEWALZT,GEGLUEHT+GEBEIZT,LEICHT NACHGEWALZT
B01

Customer article number
N.article client
Artikelnummer des Kunden
A09

Steel designation B02
Désignation de l'acier
Stahlbezeichnung

ASTM A 240-2018 TYPE 304L

Finish
Présentation
Ausfuehrung
2B

Steelmaking process C70
Mode d'élaboration de l'acier - Stahlherstellungverfahren
Prod.proces: Electric arc furnace - VOD/AOD - Continuous casting
Proc.fabric.: Four à arc - VOD/AOD - Coulée continue
Fertigungsablauf: Elektro-Ofen - VOD/AOD - Stranggussanlage

Any supplementary requirements B03
Prescriptions supplémentaires - Zusätzliche Anforderungen

Product delivery condition
Etat de livraison du produit - Lieferzustand

Solution treated:
Hypertrempe: **1050 °C**
Loesungsgegl+abgeschreckt:

Forced air-water/air forcé-eau
Geblaese Luft-Wasser B04

Z06

Identification of the product B07
Identification du produit - Identifizierung des Erzeugnisses
MELTED IN BELGIUM, MADE IN BELGIUM

Coil n.
N.Bobine - Band Nr.
94702423

Heat n.
N.Coulée - Schmelz Nr.
947024

Dimensions
Dimensions - Abmessungen

Thickness B09
Epaisseur - Staerke
3.00 mm

Width B10
Largeur - Breite
1500.00 mm

Length B11
Longueur - Laenge

Number of pieces B08
Nb de pièces - Stueckzahl
1

Net weight B13
Poids net - netto Gewicht
5140 KG

CHEMICAL ANALYSIS - ANALYSE CHIMIQUE - CHEMISCHE ZUSAMMENSETZUNG

	C	Si	Mn	Ni	Cr	Mo	Ti	N	S	P						
Required -Exigé %mini				8.00	17.50											
Anforderung. %maxi	0.030	0.75	2.00	10.50	19.50			0.100	0.030	0.045						
Cast Analysis	0.022	0.51	1.45	8.01	18.02			0.076	0.002	0.032						
Analyse coulee																
Analyse Schmelze	C71	C72	C73	C74	C75	C76	C77	C78	C79	C80	C81	C82	C83	C84	C85	C86

Positive material identification carried out : OK
Tests de vérification de la conformité de la nuance fournie : OK
Verwechslungpruefung wurde durchgefuehrt : OK
C04 C93 D52

Location (1)

MECHANICAL PROPERTIES - PROPRIETES MECANIQUES - MECHANISCHE WERTE EN ISO 6892-1 B C20

Room temperature - Température ambiante - Raumtemperatur

Test temperature (°C) : C03

Location (1)	Direction (2)		Yield or proof strength Limite d'élasticité Dehngrenze MPa		Tensile Strength Résistance à la traction Zugfestigkeit MPa	Elongation after fracture Allongement après rupt. Bruchdehnung %		Hardness Dureté Haerte	Yield or proof strength Limite d'élasticité Dehngrenze MPa		Tensile str. Résist. MPa Zugfestigkeit	Elongation % Allongement. Bruchdehnung
			Rp0.2%	Rp1%	Rm	A5	50mm	HRBW	Rp0.2%	Rp1%	Rm	A5
		Required Exigé Anforderung mini	170	240	485	40	40	92				
1	T	maxi										
		Obtained Obtenu Ergebnisse	283	315	624	60	59	83				
			C11	C14	C12	C13	C15	C31	C16	C17	C18	C19

Impact strength test
Essai de résilience
Kerbschlagzachigkeitstest

C40 t(°c) C44

C42

Corrosion test
Test de corrosion
Korrosionstest

ASTM A262 E:OK
D51

E0.2(T)/R(T) %

45
C50 C51 C52 C53 C54 C55 C05

Internal cleanliness: A: B: C: D: C57

Location of the sample (1)
Emplacement de l'échantillon
Lage des Probenabschnittes
1. Front - Début - Anfang
2. Back - Fin - Ende
3. Middle - Milieu - Mitte
C01

Direction of the test pieces (2)
Orientation des éprouvettes
Probenrichtung
T. Transverse - Travers - Quer
L. Longitudinal - Long - Laengs
C02

The delivery is in accordance with the order
La fourniture est conforme aux exigences de la commande
Die lieferung entspricht den Bestellbedingungen Z01

Packing list
Avis d'expédition **2020028129-581**
LieferscheinNummer A10

Marking, inspection and measurement : without objection
Contrôle de marquage, d'aspect et de dimensions : satisfaisants
Pruefung der Stempelung, des Oberflaechenaspekts und der
Abmessungen : ohne Beanstandung
D01

Organisation inspection
Organisme et/ou service contrôle
Ueberwachungsabteilung A05

Quality Department

3/2/2020

The inspector
Le responsable
Der Werkssachverstaendige **D. Raemakers** Z02

ZSQ701 - PS5

Seriale Certificato 00000000000000345425 File R:\A0002\00000000000000345425_ART_ICOL_10NA03501000044.TIF

outokumpu

INSPECTION CERTIFICATE 3.1
DIN EN 10204 3.1

Certificate No. / Zeugnis Nr. / N° du certificat: 433939/001
Page / Seite / Page: 1(01)
Date / Datum / Date: 08.05.2018

Delivery address, Empfänger, Lieu de livraison:
OIKI ACCIAI INOSSIDABILI S.P.A.
VIA PARADIGNA, 95/A
43122 PARMA
ITALY

OIKI ACCIAI INOSSIDABILI S.P.A.
VIA PARADIGNA, 95/A
43122 PARMA
ITALY

Requirements, Anforderungen, Exigences:
EN 10088-4:2009
AD 2000 W2, W10 & EN 10028-7:2016
ASTM A240/A240M
ASME SA-240/SA-240M II A ED. 2017

Our Order No. / Unser Auftrag Nr. / Notre commande n°: 360014649
Your order, Ihre Bestellung, Votre commande: 147

Product, Erzeugnisform, Produit: COIL , STAINLESS STEEL

Mark of Manufacturer / Zeichen des Lieferwerkes / Signe de producteur: outokumpu

Process / Erschmelzungsart / Mode de fusion: AOD

Inspector's stamp / Zeichen d. Sachverst. / Poinçon de l'expert

Grade, Werkstoff, Nuance: 1.4404 1.4401 TYPE 316L

Tolerances, Toleranzen, Tolérances: EN ISO 9445-2

Marking, Kennzeichnung, Marquage: 1.4404 2B

Marks, Versandzeichen, Marques:

Line / Reihe / Ligne	Item / Position / Posta	Charge-test No. / Schmelze-Probe Nr. / Coulée n°	Size, Abmessungen, Dimensions	Quantity / Stückzahl / Nombre	Weight, Gewicht, Poids	Finish / Ausführung / Fini EN/ASTM
1	14	81910 5	2,5 X 1500 MM		23480 KG	2B

CE 14 0045-CPR-0567

Charge no. / Schmelze Nr. / Coulée n°	Chemical composition, Chemische Zusammensetzung, Composition chimiques										
	C %	Si %	Mn %	P %	S %	Cr %	Ni %	MO %	N %	CO %	
81910	0,019	0,48	0,89	0,035	0,001	17,1	10,1	2,04	0,037	0,26	

Line / Reihe / Ligne	Mechanical properties, Mechanische Eigenschaften, Caracteristiques mecaniques									
	Sample ID / Proben ID / Echantillon	Rp0.2 MPa	Rp1.0 MPa	Rm MPa	%	A50 %	A80 %	Hardness / Härte,Durté HBW		
1	01	301	336	609		53	52	158		
	02	289	323	598		56	55	155		

Tensile test, Zugversuch, Essai de traction:
ISO 6892-1:2009 A224
SAMPLES PERPENDICULAR TO THE ROLLING DIRECTION

APPROVED ACC.TO AD2000-W0 WITH VERIFICATION OF THE UNIFORMITY OVER THE STRIP LENGTH. CERTIFIED ACC.TO PED 2014/68/EU BY TÜV NORD REG. NO. 0045. DOPS ACC. TO CPR AVAILABLE ON THE WEB PAGE BY STEEL NUMBER

Identity test, Verwechslungsprüfung, Controle d'identification: OK
Sizes, Abmessungen, Dimensions: OK
Surface, Oberfläche, Surface: OK
Test of intergran. corros, Prüfung auf interkrist. Korros, Test de corros. intercrist.
EN ISO 3651-2 A: OK

ASTM A240/A240M
ASME SA-240/SA-240M II A ED. 2017
TYPE 316
EN 10088-2:2014/1.4404, 1.4401
NACE MR0103/ISO 17945 AND
NACE MR0175/ISO 15156-1 / NACE MR0175/ISO 15156-3
MATERIAL IS FREE OF KNOWN MERCURY CONTAMINATION
HEAT TREATMENT 1070 C

We certify that the above mentioned products comply with the terms of the order contract.
Wir bestätigen, dass die Lieferung den Vereinbarungen der Bestellannahme entspricht.
Nous certifions que les produits énumérés ci-dessus sont conformes aux prescriptions de la commande.

This test certificate is made by controlled ADP-system and is valid without signature.
Dieses Zeugnis wurde von einem überprüften Datenverarbeitungssystem erstellt und ist ohne Unterschrift gültig.
Ce certificat a été établi par un système informatique controlé et est valide sans signature.

Outokumpu Stainless Oy

Authorized inspector / Werkssachverständiger / Inspecteur autorisé: LARI NISSINEN

FI-95490 Tornio, Finland
Tel. +358 16 4521,email certificate.tornio@outokumpu.com,
www.outokumpu.com
Domicile: Tornio, Finland. Business Identity Code 0823315-9

This to declare that the material as described in here as been cut to :
LAM.316L 4000X1500X2,5 2B Lenght: 4000,000
and remarked with steelgrade, heat n°, workinspector's stamp CC

Seriale Certificato 00000000000000364080 File R:\A0002\00000000000000364080_ART_ICOL_10NA03501000045.TIF

A04

aperam

Correspondenticadres:
Aperam Genk
Swinnenwijerweg 5, Poort Genk 7523
3600 Genk, Belgium
Tel. +32 (0)89 30 21 11

A01

MILL CERTIFICATE BS EN 10204/3.1
CERTIFICAT DE RECEPTION NF EN 10204/3.1
ABNAHMEPRUEFZEUGNIS DIN EN 10204/3.1

A02

Certified acc.PED 2014/68/EU Annex 1 § 4.3 by Certification Body 0036 of TUV SUD Industrie Service GmbH with cert.No.:314/2007/MUC.Renounced of counter signature agreed byTÜV SÜD (9/5/2007).Approved acc.AD 2000-Merkblatt W0/TRD 100 by TÜV SÜD Industrie Service GmbH.Confirmation letter from TÜVSÜD Industrie Service GmbH of 07/05/2010 about the uniformity of coils acc.AD2000 W2 §4.1.1

Tech.Req.:AD 2000 W2 -- AD 2000 W10 -- EN 13445-2 Z05

N-Nr-N 18K0043162-01 V01 A03

Manufacturer's works order number
N° de la commande usine productrice
Werksauftragsnummer
80459979/14-20076/322/14 A08

Surveyor's mark
Cachet de l'expert
Stempel des
Werkssachverstaendigen
GNK1 Z03

Purchaser and/or consignee
Client et/ou destinataire
Besteller und/oder Empfaenger
OIKI ACCIAI INOSSIDABILI SPA
VIA PARADIGNA 95/A
43100 PARMA
ITALIE A06

Purchaser's order number
N° de commande client
Kundenbestellnummer
ord 343 ottobre 2018 A07

Product - Produit - Erzeugnis
COIL, COLD ROLLED, FINISH 2 B
COIL, LAMINE A FROID, FINI 2 B
COIL,KALTGEWALZT,GEGLUEHT+GEBEIZT,LEICHT NACHGEWALZT B01

Customer article number
N.article client
Artikelnummer des Kunden A09

Steel designation B02
Désignation de l'acier
Stahlbezeichnung

	Finish Présentation Ausfuehrung
EN 10028-7-2016 1.4404 / 1.4401	2B
EN 10088-2-2014 1.4404 / 1.4401	2B
ASTM A 240-2017 TYPE 316L / 316	2B
ASME SA 240-2017 TYPE 316L / 316	2B
EN 10088-4-2009 1.4404 / 1.4401	2B

Steelmaking process C70
Mode d'élaboration de l'acier - Stahlherstellungverfahren
Prod.proces: Electric arc furnace - VOD/AOD - Continuous casting
Proc.fabric.: Four à arc - VOD/AOD - Coulée continue
Fertigungsablauf: Elektro-Ofen - VOD/AOD - Stranggussanlage

Any supplementary requirements B03
Prescriptions supplémentaires - Zusätzliche Anforderungen
OIKI LAF 2017

Product delivery condition
Etat de livraison du produit - Lieferzustand

Solution treated:
Hypertrempe: **1050 °C**
Loesungsgegl+abgeschreckt:

Forced air-water/air forcé-eau
Geblaese Luft-Wasser B04

ASTM A480 / A480M -- ASME CODE SECT.2 PT.A -- MAT MERCURY FREE// NACE MR 0175 / ISO 15156-1 / ISO 15156-3 -- NACE MR 0103 // CORR. TEST: ASTM A262-E: OK // CORROSION INTERGRANULAIRE SELON ISO 3651/2:OK Z06

Identification of the product B07
Identification du produit - Identifizierung des Erzeugnisses
MELTED IN BELGIUM, MADE IN BELGIUM

Dimensions
Dimensions - Abmessungen

Thickness B09 Epaisseur - Staerke	Width B10 Largeur - Breite	Length B11 Longueur - Laenge
2.50 mm	2000.00 mm	

Number of pieces B08
Nb de pièces - Stueckzahl: **1**

Net weight B13
Poids net - netto Gewicht: **27470 KG**

Coil n. N.Bobine - Band Nr.	Heat n. N.Coulée - Schmelz Nr.
83508634	835086

CHEMICAL ANALYSIS - ANALYSE CHIMIQUE - CHEMISCHE ZUSAMMENSETZUNG

	C	Si	Mn	Ni	Cr	Mo	Ti	N	S	P	Cu	Co				
Required -Exigé %mini				10.00	16.50	2.00										
Anforderung. %maxi	0.030	0.75	2.00	13.00	18.00	2.50		0.100	0.015	0.045						
Cast Analysis	0.023	0.50	1.24	10.02	16.55	2.06		0.041	0.003	0.039	0.35	0.237				
Analyse coulee																
Analyse Schmelze	C71	C72	C73	C74	C75	C76	C77	C78	C79	C80	C81	C82	C83	C84	C85	C86

Positive material identification carried out : OK
Tests de vérification de la conformité de la nuance fournie : OK
Verwechslungpruefung wurde durchgofuehrt : OK C04 C93 D52

Location (1)

MECHANICAL PROPERTIES - PROPRIETES MECANIQUES - MECHANISCHE WERTE EN ISO 6892-1 B / A-SA 370 C20

Room temperature - Température ambiante - Raumtemperatur — Test temperature (°C) : C03

	Direction (2)		Yield or proof strength Limite d'élasticité Dehngrenze MPa		Tensile Strength Résistance à la traction Zugfestigkeit MPa	Elongation after fracture Allongement après rupt. Bruchdehnung %		Hardness Dureté Haerte	Yield or proof strength Limite d'élasticité Dehngrenze MPa		Tensile str. Résist. MPa Zugfestigkeit	Elongation % Allongement. Bruchdehnung
		Required Exigé Anforderung	Rp0.2%	Rp1%	Rm	50mm	80mm	HRBW	Rp0.2%	Rp1%	Rm	50mm
		mini	240	270	530	40	40					
		maxi			680			95				
1	T	Obtained Obtenu Ergebnisse	310	334	639	51	48	83				
2								84				
			C11	C14	C12	C13	C15	C31	C16	C17	C18	C19

Impact strength test Essai de résilience Kerbschlagzaehigkeitstest	Corrosion test Test de corrosion Korrosionstest	E0.2(T)/R(T) %						
C40 t(°) C44	EN ISO 3651/2 - A:OK	48						
C42	D51	C50	C51	C52	C53	C54	C55	C05

Internal cleanliness: A: B: C: D: C57

Location of the sample (1)
Emplacement de l'échantillon
Lage des Probenabschnittes
1. Front - Début - Anfang
2. Back - Fin - Ende
3. Middle - Milieu - Mitte C01

Direction of the test pieces (2)
Orientation des éprouvettes
Probenrichtung
T. Transverse - Travers - Quer
L. Longitudinal - Long - Laengs C02

The delivery is in accordance with the order
La fourniture est conforme aux exigences de la commande
Die lieferung entspricht den Bestellbedingungen Z01

Packing list
Avis d'expédition
LieferscheinNummer **2018050402-20076** A10

Marking, inspection and measurement : without objection
Contrôle de marquage, d'aspect et de dimensions : satisfaisants
Pruefung der Stempelung, des Oberflaechenaspekts und der Abmessungen : ohne Beanstandung D01

Organisation inspection
Organisme et/ou service contrôle
Ueberwachungsabteilung A05

Quality Department
27/9/2018

The inspector
Le responsable
Der Werkssachverstaendige **D. Raemaekers** Z02

ZSQ701 - PS5

This to declare that the material as described in here as been cut to :
LAM.316L 4000X2000X2,5 2B Lenght: 4000,000
and remarked with steelgrade, heat n°, workinspector's stamp CC

Seriale Certificato 00000000000000364055 File R:\A0002\00000000000000364055_ART_ICOL_10NA02001000125.TIF

A04

aperam

Correspondenticadres:
Aperam Genk
Swinnenwijerweg 5, Poort Genk 7523
3600 Genk, Belgium
Tel. +32 (0)89 30 21 11

A01

MILL CERTIFICATE BS EN 10204/3.1
CERTIFICAT DE RECEPTION NF EN 10204/3.1
ABNAHMEPRUEFZEUGNIS DIN EN 10204/3.1

A02

Certified acc.PED 2014/68/EU Annex 1 § 4.3 by Certification Body 0036 of TUV SUD Industrie Service GmbH with cert.No.:314/2007/MUC.Renounced of counter signature agreed byTÜV SÜD (9/5/2007).Approved acc.AD 2000-Merkblatt W0/TRD 100 by TÜV SÜD Industrie Service GmbH.Confirmation letter from TÜVSÜD Industrie Service GmbH of 07/05/2010 about the uniformity of coils acc.AD2000 W2 §4.1.1

Tech.Req.:AD 2000 W2 -- AD 2000 W10 -- EN 13445-2 Z05

N-Nr-N **18K0043271-01 V01** A03

Manufacturer's works order number
N° de la commande usine productrice
Werksauftragsnummer
80454651/02-20076/319/02 A08

Surveyor's mark
Cachet de l'expert
Stempel des
Werkssachverstaendigen
GNKI Z03

Purchaser and/or consignee
Client et/ou destinataire
Besteller und/oder Empfaenger
OIKI ACCIAI INOSSIDABILI SPA
VIA PARADIGNA 95/A
43100 PARMA
ITALIE
A06

Purchaser's order number
N° de commande client
Kundenbestellnummer
ORD. 304 SETTEMBRE A07

Customer article number
N.article client
Artikelnummer des Kunden
A09

Product - Produit - Erzeugnis
COIL, COLD ROLLED, FINISH 2 B
COIL, LAMINE A FROID, FINI 2 B
COIL,KALTGEWALZT,GEGLUEHT+GEBEIZT,LEICHT NACHGEWALZT
B01

Steel designation B02
Désignation de l'acier
Stahlbezeichnung
EN 10028-7-2016 1.4307 / 1.4301
EN 10088-2-2014 1.4307 / 1.4301
ASTM A 240-2017 TYPE 304L / 304
ASME SA 240-2017 TYPE 304L / 304
EN 10088-4-2009 1.4307 / 1.4301

Finish
Présentation
Ausfuehrung
2B
2B
2B
2B
2B

Steelmaking process C70
Mode d'élaboration de l'acier - Stahlherstellungverfahren
Prod.proces: Electric arc furnace - VOD/AOD - Continuous casting
Proc.fabric.: Four à arc - VOD/AOD - Coulée continue
Fertigungsablauf: Elektro-Ofen - VOD/AOD - Stranggussanlage

Any supplementary requirements B03
Prescriptions supplémentaires - Zusätzliche Anforderungen
OIKI LAF 2017

Product delivery condition
Etat de livraison du produit - Lieferzustand

Solution treated:
Hypertrempe: **1050 °C**
Loesungsgegl+abgeschreckt:

Forced air-water/air forcé-eau
Geblaese Luft-Wasser B04

NACE MR 0175 / ISO 15156-1 / ISO 15156-3 -- NACE MR 0103 // CORR. TEST: ASTM A262-E: OK // ASTM A480 / A480M -- ASME CODE SECT.2 PT.A -- MAT MERCURY FREE // CORROSION INTERGRANULAIRE SELON ISO 3651/2:OK
Z06

Identification of the product B07
Identification du produit - Identifizierung des Erzeugnisses
MELTED IN BELGIUM, MADE IN BELGIUM

Dimensions
Dimensions - Abmessungen

Thickness B09
Epaisseur - Staerke
2.00 mm

Width B10
Largeur - Breite
2000.00 mm

Length B11
Longueur - Laenge

Number of pieces B08
Nb de pièces - Stueckzahl
1

Net weight B13
Poids net - netto Gewicht
28070 KG

Coil n.
N.Bobine - Band Nr.
83511637

Heat n.
N.Coulée - Schmelz Nr.
835116

CHEMICAL ANALYSIS - ANALYSE CHIMIQUE - CHEMISCHE ZUSAMMENSETZUNG

	C	Si	Mn	Ni	Cr	Mo	Ti	N	S	P	Cu	Co				
Required - Exigé %mini				8.00	18.00											
Anforderung. %maxi	0.030	0.75	2.00	10.50	19.50			0.100	0.015	0.045						
Cast Analysis	0.025	0.33	1.43	8.02	18.20			0.079	0.005	0.033	0.38	0.174				
Analyse coulee																
Analyse Schmelze	C71	C72	C73	C74	C75	C76	C77	C78	C79	C80	C81	C82	C83	C84	C85	C86

D52

Positive material identification carried out : OK
Tests de vérification de la conformité de la nuance fournie : OK
Verwechslungpruefung wurde durchgefuehrt : OK
C04 C93

MECHANICAL PROPERTIES - PROPRIETES MECANIQUES - MECHANISCHE WERTE EN ISO 6892-1 B / A-SA 370 C20

Location (1)
Direction (2)
Room temperature - Température ambiante - Raumtemperatur
Test temperature (°C) : C03

		Required Exigé Anforderung	Yield or proof strength Limite d'élasticité Dehngrenze MPa		Tensile Strength Résistance à la traction Zugfestigkeit MPa	Elongation after fracture Allongement après rupt. Bruchdehnung %		Hardness Dureté Haerte	Yield or proof strength Limite d'élasticité Dehngrenze MPa		Tensile str. Résist. MPa Zugfestigkeit	Elongation % Allongement. Bruchdehnung
			Rp0.2%	Rp1%	Rm	50mm	80mm	HRBW	Rp0.2%	Rp1%	Rm	50mm
		mini	230	260	540	45	45	92				
		maxi			700							
1	T	Obtained Obtenu Ergebnisse	317	341	653	52	49	86				
2								85				
			C11	C14	C12	C13	C15	C31	C16	C17	C18	C19

Impact strength test Essai de résilience Kerbschlagzaehigkeitstest		Corrosion test Test de corrosion Korrosionstest	B0.2(T)/R(T) %						
C40	(°c) C44								
	C42	EN ISO 3651/2 - A:OK	48 C50	C51	C52	C53	C54	C55	C05
		D51	Internal cleanliness:		A:	B:	C:	D:	C57

Location of the sample (1)
Emplacement de l'échantillon
Lage des Probenabschnittes
1. Front - Début - Anfang
2. Back - Fin - Ende
3. Middle - Milieu - Mitte
C01

Direction of the test pieces (2)
Orientation des éprouvettes
Probenrichtung
T. Transverse - Travers - Quer
L. Longitudinal - Long - Laengs
C02

The delivery is in accordance with the order
La fourniture est conforme aux exigences de la commande
Die lieferung entspricht den Bestellbedingungen Z01

Packing list
Avis d'expédition **2018049844-20076**
LieferscheinNummer A10

Marking, inspection and measurement : without objection
Contrôle de marquage, d'aspect et de dimensions : satisfaisants
Pruefung der Stempelung, des Oberflaechenaspekts und der Abmessungen : ohne Beanstandung
D01

Organisation inspection
Organisme et/ou service contrôle
Ueberwachungsabteilung A05

Quality Department
28/9/2018

The Inspector
Le responsable
Der Werkssachverstaendige
D. Raemaekers Z02

ZSQ701 - PS5

This to declare that the material as described in here as been cut to :
COIL 304/304L 2000X 2,0 2B Lenght: 0,000
and remarked with steelgrade, heat n°, workinspector's stamp CC

Seriale Certificato 00000000000000367638 File R:\A0002\00000000000000367638_ART_ICOL_10NA02001000140.TIF

aperam

Aperam - Stainless France
Aperam Isbergues
62330 Isbergues
FRANCE

MILL CERTIFICATE BS EN 10204/3.1
CERTIFICAT DE RECEPTION NF EN 10204/3.1
ABNAHMEPRUEFZEUGNIS DIN EN 10204/3.1

Ausgestellt im Einvernehmen mit dem TÜV SÜD - Auf Gegenzeichnung wird verzichtet
Issued in accordance with TÜV SÜD - Verification is not required
Etabli en accord avec le TÜV SÜD - Dispense de contresignature
AD 2000 Merkblatt-W0 - PED 2014/68 EU Annex I,Point 4.3

ISO 9001:2015 - IATF 16949:2016 - ISO 14001:2015

N-Nr-N 1810558641-01 V01

Manufacturer's works order number
N° de la commande usine productrice
Werksauftragsnummer
80459979 /03-58071/1

Surveyor's mark
Cachet de l'expert
Stempel des
Werkssachverstaendigen
UI2

Purchaser and/or consignee
Client et/ou destinataire
Bestelle r und/oder Empfaenger
OIKI ACCIAI INOSSIDABILI SPA
VIA PARADIGNA 95/A
43100 PARMA
ITALIE

Purchaser's order number
N° de commande client
Kundenbestellnummer
ord 343 ottobre 2018

Product - Produit - Erzeugnis
COLD-ROLLED COIL
BOBINE LAMINEE A FROID
KALTGEWALZTES BAND

Customer article number
N.article client
Artikelnummer des Kunden

Steel designation
Désignation de l'acier
Stahlbezeichnung
EN 10028-7 / 16 - W2-W10 -1.4307 -1.4301
EN 10088-2 / 14 - 1.4307 -1.4301
ASTM A 240 / 17 - TYPE 304L -TYPE 304
ASME SA 240 / 17 - TYPE 304L -TYPE 304
EN 10088-4 / 09 - 1.4307 -1.4301

Finish
Présentation
Ausfuehrung
2B
2B
2B
2B
2B

Steelmaking process
Mode d'élaboration de l'acier - Stahlherstellungverfahren
Prod.proces: Electric arc furnace - VOD/AOD - Continuous casting
Proc.fabric.: Four à arc - VOD/AOD - Coulée continue
Fertigungsablauf: Elektro-Ofen - VOD/AOD - Stranggussanlage

Any supplementary requirements
Prescriptions supplémentaires - Zusätzliche Anforderungen
OIKI LAF 2017

Product delivery condition
Etat de livraison du produit - Lieferzustand

Solution treated
Hypertrempe : 1040 C MINI
Loesungsgegl+abgeschreckt

Forced Air
Air forcé Geblaese Luft

CORR. TEST:ASTM A 262-E: OK / ASTM A480 / A480M-- ASME CODE SECT.2 PT.A -- MAT MERCURY FREE/ NACE MR 0175 / ISO 15156-1 / ISO 15156-3 -- NACE MR 0103
/ CORROSION INTERGRANULAIRE SELON ISO 3651/2 : OK / /

Identification of the product
Identification du produit - Identifizierung des Erzeugnisses
MELTED IN BELGIUM, MADE IN FRANCE

Coil n.
N.Bobine - Band Nr.
87653

Heat n.
N.Coulée - Schmelz Nr.
839106

Dimensions
Dimensions - Abmessungen

Thickness
Epaisseur - Staerke
2,500 mm

Width
Largeur - Breite
1500,00 mm

Length
Longueur - Laenge

Number of pieces
Nb de pièces - Stueckzahl
1

Net weight
Poids net - netto Gewicht
22890 KGS

CHEMICAL ANALYSIS - ANALYSE CHIMIQUE - CHEMISCHE ZUSAMMENSETZUNG

	C	Si	Mn	Ni	Cr	Mo	Ti	N	S	P	Cu	Co				
Required -Exigé %mini / Anforderung. %maxi	0,030	0,75	2,00	8,00 / 10,50	18,00 / 19,50			0,100	0,0150	0,045						
Cast Analysis / Analyse coulée / Analyse Schmelze	0,024	0,41	1,44	8,02	18,05			0,072	0,0020	0,033	0,400	0,167				
	C71	C72	C73	C74	C75	C76	C77	C78	C79	C80	C81	C82	C83	C84	C85	C86

Positive material identification carried out : OK
Tests de vérification de la conformité de la nuance fournie : OK
Verwechslungpruefung wurde durchgefuehrt : OK
C04 C93 D52

Location (1)

MECHANICAL PROPERTIES - PROPRIETES MECANIQUES - MECHANISCHE WERTE C20

Room temperature - Température ambiante - Raumtemperatur
Test temperature (°C) : C03

Direction (2)		Required / Exigé / Anforderung	Yield or proof strength Limite d'élasticité Dehngrenze MPa		Tensile Strength Résistance à la traction Zugfestigkeit MPa	Elongation after fracture Allongement après rupt. Bruchdehnung %		Hardness Dureté Haerte	Yield or proof strength Limite d'élasticité Dehngrenze MPa		Tensile str. Résist. MPa Zugfestigkeit	Elongation % Allongement. Bruchdehnung
			Rp0,2%	Rp1%	Rm		50mm	HRBW	Rp0,2%	Rp1%	Rm	
		mini	230	260	540		45					
		maxi			700			92				
1	T	Obtained / Obtenu / Ergebnisse	291	326	627		57	84				
2	T							83				
			C11	C14	C12	C13	C15	C31	C16	C17	C18	C19

Impact strength test / Essai de résilience / Kerbschlagzaehigkeitstest
C40 t(°c) C44 C42

Corrosion test / Test de corrosion / Korrosionstest
EN ISO 3651-2 :OK
D51

C50 C51 C52 C53 C54 C55 C05

Internal cleanliness: A: B: C: D: C57

Location of the sample (1)
Emplacement de l'échantillon
Lage des Probenabschnittes
1. Front - Début - Anfang
2. Back - Fin - Ende
3. Middle - Milieu - Mitte
C01

Direction of the test pieces (2)
Orientation des éprouvettes
Probenrichtung
T. Transverse - Travers - Quer
L. Longitudinal - Long - Laengs
C02

The delivery is in accordance with the order
La fourniture est conforme aux exigences de la commande
Die Lieferung entspricht den Bestellbedingungen
Z01

Packing list
Avis d'expédition 1810181102504-20076
LieferscheinNummer
A10

Marking, inspection and measurement : without objection
Contrôle de marquage, d'aspect et de dimensions : satisfaisants
Pruefung der Stempelung, des Oberflaechenaspekts und der
Abmessungen : ohne Beanstandung
D01

Organisation inspection
Organisme et/ou service contrôle
Ueberwachungsabteilung
A05

Quality Control
18/10/2018 Laurent DUBOIS

The inspector
Le responsable
Der Werkssachverstaendige
Z02

ZSQ701 - PS5

This to declare that the material as described in here as been cut to :
COIL 304/304L 1500X 2,5 2B Lenght: 0,000
and remarked with steelgrade, heat n°, workinspector's stamp CC

Seriale Certificato 00000000000000269805 File R:\A0002\00000000000000269805_ART_ICOL_10NA03501000057.TIF

A04

aperam

Correspondenticadres:
Aperam Genk
Swinnenwijerweg 5, Poort Genk 7523
3600 Genk, Belgium
Tel. +32 (0)89 30 21 11

A01

MILL CERTIFICATE BS EN 10204/3.1
CERTIFICAT DE RECEPTION NF EN 10204/3.1
ABNAHMEPRUEFZEUGNIS DIN EN 10204/3.1

A02

Certified acc.PED 2014/68/EC Annex I § 4.3 by Certification Body 0036 of TUV SUD Industrie Service GmbH with cert.No.:314/2007/MUC.Renounced of counter signature agreed byTÜV SÜD (9/5/2007).Approved acc.AD 2000-Merkblatt W0/TRD 100 by TÜV SÜD Industrie Service GmbH.Confirmation letter from TÜVSÜD Industrie Service GmbH of 07/05/2010 about the uniformity of coils acc.AD2000 W2 §4.1.1

Tech.Req.:AD 2000 W2 -- AD 2000 W10 -- EN 13445-2

Z05

N.Nr-N 17K0003711-01 V01 A03

Manufacturer's works order number
N° de la commande usine productrice
Werksauftragsnummer
80348577/02-20076/258/02 A08

Surveyor's mark
Cachet de l'expert
Stempel des
Werkssachverstaendigen
GNK1 Z03

Purchaser and/or consignee
Client et/ou destinataire
Besteller und/oder Empfaenger
OIKI ACCIAI INOSSIDABILI SPA
VIA PARADIGNA 95/A
43100 PARMA
ITALIE
A06

Purchaser's order number
N° de commande client
Kundenbestellnummer
493 gennaio - 316L laf A07

Customer article number
N.article client
Artikelnummer des Kunden A09

Product - Produit - Erzeugnis
COIL, COLD ROLLED, FINISH 2 B
COIL, LAMINE A FROID, FINI 2 B
COIL,KALTGEWALZT,GEGLUEHT+GEBEIZT,LEICHT NACHGEWALZT
B01

Steel designation B02
Désignation de l'acier
Stahlbezeichnung
EN 10028-7-2008 1.4404 / 1.4401
EN 10088-2-2014 1.4404 / 1.4401
ASTM A 240-2016 TYPE 316L / 316
ASME SA 240-2015 TYPE 316L / 316
EN 10088-4-2009 1.4404 / 1.4401

Finish
Présentation
Ausfuehrung
2B
2B
2B
2B
2B

Steelmaking process C70
Mode d'éleboration de l'acier - Stahlherstellungverfahren
Prod.proces: Electric arc furnace - VOD/AOD - Continuous casting
Proc.fabric.: Four à arc - VOD/AOD - Coulée continue
Fertigungsablauf: Elektro-Ofen - VOD/AOD - Stranggussanlage

Any supplementary requirements B03
Prescriptions supplémentaires - Zusätzliche Anforderungen

Product delivery condition
Etat de livraison du produit - Lieferzustand

Solution treated:
Hyperttrempe: 1050 °C
Loesungsgegl+abgeschreckt:

Forced air-water/air forcé-eau
Geblaese Luft-Wasser B04

NACE MR 0175 / ISO 15156-1 / ISO 15156-3 // MATERIAL MERCURY FREE // ASTM A480 / A480M -- ASME CODE SECT.2 PT.A -- MAT MERCURY FREE // CORR. TEST: ASTM A262-E: OK

Z06

Identification of the product B07
Identification du produit - Identifizierung des Erzeugnisses
MELTED IN BELGIUM, MADE IN BELGIUM

Dimensions
Dimensions - Abmessungen

Thickness B09	Width B10	Length B11
Epaisseur - Staerke	Largeur - Breite	Longueur - Laenge
3.00 mm	2000.00 mm	

Number of pieces B08
Nb de pièces - Stueckzahl: 1

Net weight B13
Poids net - netto Gewicht: 13830 KG

Coil n.
N.Bobine - Band Nr.
64300710

Heat n.
N.Coulée - Schmelz Nr.
643007

CHEMICAL ANALYSIS - ANALYSE CHIMIQUE - CHEMISCHE ZUSAMMENSETZUNG

	C	Si	Mn	Ni	Cr	Mo	Ti	N	S	P	Cu	Co				
Required - Exigé %mini / Anforderung. %maxi	0.030	0.75	2.00	10.00 / 13.00	16.50 / 18.00	2.00 / 2.50		0.100	0.015	0.045						
Cast Analysis / Analyse coulee / Analyse Schmelze	0.023 C71	0.47 C72	1.25 C73	10.04 C74	16.60 C75	2.03 C76	C77	0.035 C78	0.002 C79	0.033 C80	0.36 C81	0.245 C82	C83	C84	C85	C86

Positive material identification carried out : OK
Tests de vérification de la conformité de la nuance fournie : OK
Verwechslungpruefung wurde durchgefuehrt : OK
C04 C93 D52

Location (1)

MECHANICAL PROPERTIES - PROPRIETES MECANIQUES - MECHANISCHE WERTE EN ISO 6892-1 B / A-SA 370 C20

Room temperature - Température ambiante - Raumtemperatur — Test temperature (°C): C03

Direction (2)		Yield or proof strength Limite d'élasticité Dehngrenze MPa		Tensile Strength Résistance à la traction Zugfestigkeit MPa	Elongation after fracture Allongement après rupt. Bruchdehnung %		Hardness Dureté Haerte	Yield or proof strength Limite d'élasticité Dehngrenze MPa		Tensile str. Résist. MPa Zugfestigkeit	Elongation % Allongement Bruchdehnung
Required Exigé Anforderung		Rp0.2%	Rp1%	Rm	50mm	80mm	HRBW	Rp0.2%	Rp1%	Rm	50mm
	mini	240	270	530	40	40					
	maxi			680			95				
1 T	Obtained Obtenu Ergebnisse	317 C11	339 C14	633 C12	50 C13	47 C15	83	C16	C17	C18	C19
2							82 C31				

Impact strength test Essai de résilience Kerbschlagzaehigkeitstest			Corrosion test Test de corrosion Korrosionstest	E0.2(T)/R(T) %						
C40	t(°c)	C44	EN ISO 3651/2 - A:OK	50 C50	C51	C52	C53	C54	C55	C05
		C42	D51	Internal cleanliness:	A:	B:	C:	D:		C57

Location of the sample (1)
Emplacement de l'échantillon
Lage des Probenabschnittes
1. Front - Début - Anfang
2. Back - Fin - Ende
3. Middle - Milieu - Mitte
C01

The delivery is in accordance with the order
La fourniture est conforme aux exigences de la commande
Die lieferung entspricht den Bestellbedingungen Z01

Packing list
Avis d'expédition 2017026188-20076
LieferscheinNummer A10

Organisation inspection
Organisme et/ou service contrôle
Ueberwachungsabteilung A05

Quality Department

25/1/2017

The inspector
Le responsable
Der Werkssachverstaendige D. Raemaekers Z02

Direction of the test pieces (2)
Orientation des éprouvettes
Probenrichtung
T. Transverse - Travers - Quer
L. Longitudinal - Long - Laengs
C02

Marking, inspection and measurement : without objection
Contrôle de marquage, d'aspect et de dimensions : satisfaisants
Pruefung der Stempelung, des Oberflaechenaspekts und der Abmessungen : ohne Beanstandung
D01

Z5Q701 - PS5

This to declare that the material as described in here as been cut to :
COIL 316/L 2000X 3,0 2B Lenght: 5979.000
and remarked with steelgrade, heat n°, workinspector's stamp CC

SIDERINOX

Siderinox S.p.a. Frazione Caselle 20081 Morimondo (MI) Italia
Ufficio Commerciale: Tel. 02 9498151 - Fax 02 949815250/251
Ufficio Amministrativo: Tel. 02 9498161 - Fax 02 949816350
Ufficio Spedizioni: Tel. 02 949816222 - Fax 02 949815350
Ufficio Acquisti : Tel. 02 949816345 - Fax 02 949816350
Casella e-mail: sx@siderinox.it Sito web: www.siderinox.it

Capitale Sociale Euro 3.300.000 i.v.
Cod. Fiscale e Reg. Imp. MI N. 01825510157
R.E.A. Milano N. 878116
Centro Meccanografico n. MI074282
Partita IVA 01825510157

м.Київ * Україна * Товариство з обмеженою відповідальністю
AZIENDA CON SISTEMA DI GESTIONE QUALITÀ CERTIFICATO DA DNV GL = ISO 9001 =
Ідентифікаційний код 38746814 №2

INSPECTION CERTIFICATE EN 10204 3.1 N° 506818 of 20.10.2017

Purchaser **MODUS - SV LLC**

DDT	SIDERINOX order number	Customer's order
N 3033 of 20.10.2017	N 3648 of 17.10.2017	N of 17.10.2017

Product
Stainless steel round pipe Ø 70 x 2 mm AISI 304/304L brushed EN 10357 Longitudinally welded

Dimension	Steel type	Quantity (m)	Weight (kg)
70 x 2 mm	EN 1.4301/1.4307 / AISI 304/304L	432	1306

Production Norm	Rolling	Tolerances	Welding factor
EN 10357	Cold rolled	EN 10357 \ EN 10357	V=1

Marking MANUFACTURER'S MARK - DIMENSION - STEELGRADE - HEAT N. - PRODUCTION NORM - EXECUTION - E.C. INSPECTOR - WORK INSPEKTOR

Manufacturing process — Surface finishing W0b

CHEMICAL COMPOSITION

Heat	% C	%Mn	%P	% S	%Si	%Cr	% Ni	% Mo	% Ti	% N
	0,000 - 0,030	0,000 - 2,000	0,000 - 0,045	0,000 - 0,015	0,000 - 1,000	17,500 - 19,500	8,000 - 10,000	0,000 - 0,000	0,000 - 0,000	0,000 - 0,110
0449586	0,021	1,650	0,030	0,001	0,300	18,100	8,060			0,059

The chemical values refer to the certificate issued by the steel mill according to EN 10088 / 10028-7 / ASTM A 240 and stored at our office.

TEST RESULTS

* (D) Direction: (L) Longitudinal, (T) Transverse - ** (P) Position: (W) Welding, (M) Material

Test unit	Test Class	(D) *	(P) **	TENSILE TEST in N/mm²=MPa				HARDNESS
				Yield Strength		Tensile Strength	Elongation	
				Rp 0,2%	Rp 1%	Rm	A %	HRB
				195 -	230 -	500 - 740	40 -	
T17100259	TC1	L	M	244	334	619	49	
T17100274	TC1	L	M	246	328	613	48	

Visual inspection OK	Drift expanding test UNI EN ISO 8493 OK	Sealing test UNI EN ISO 10893-1 OK
Check on dimensions OK	Flattenning test UNI EN ISO 8492 OK	Non destructive Eddy Current test UNI EN ISO 10893-2 OK
Antimixing test OK	Weld bend test N.P. N.P.	Intergranular corrosion test EN ISO 3651-2 N. P.

Rugosità interna Ra max 0,8 µm-Saldatura Ra max 1,6 µm

WE CERTIFY THAT THE MATERIAL SUPPLIED COMPLIES WITH THE REQUIREMENTS AGREED ON THIS ORDER

Notes:

Cerifications:	Document issued by:	Document confirmed by:
UNI EN ISO 9001 Dir. PED 2014/68/UE AQUAP from Nr. 7293-06-TU to Nr 7298-06-TU Qualifications: WPS/WPAR: UNI EN ISO 15609-4/UNI EN ISO 15614-11 WLD: UNI EN ISO 14732 operator NDT: UNI EN ISO 9712 operator	*D. Ricco* *M. Vendramel* Quality engineering	*O. Fiorentini* Quality manager

Cert. Coll. - Rev. 5 - 10/17

SIDERINOX

Siderinox S.p.a. Frazione Caselle 20081 Morimondo (MI) Italia
Ufficio Commerciale: Tel. 02 9498151 - Fax 02 949815250/251
Ufficio Amministrativo: Tel. 02 9498161 - Fax 02 949816350
Ufficio Spedizioni: Tel. 02 949816222 - Fax 02 949816350
Ufficio Acquisti : Tel. 02 949816345 - Fax 02 949816350
Casella e-mail: sx@siderinox.it Sito web: www.siderinox.it

Capitale Sociale Euro 3.300.000 i.v.
Cod. Fiscale e Reg. Imp. MI N. 01825510157
R.E.A. Milano N. 878116
Centro Meccanografico n. MI074282
Partita IVA 01825510157

AZIENDA CON SISTEMA DI GESTIONE QUALITÀ CERTIFICATO DA ONV GL = ISO 9001=

INSPECTION CERTIFICATE EN 10204 3.1 N° 557378 of 17.04.2019

Purchaser AMARI UKRAINE LLC

DDT	SIDERINOX order number	Customer's order
N 1353 of 17.04.2019	N 5004 of 10.12.2018	N of 10.12.2018

Product
Stainless steel round pipe Ø 154 x 2 mm AISI 304/304L brushed EN 10217-7 Longitudinally welded

Dimension	Steel type	Quantity (m)	Weight (kg)
154 x 2 mm	EN 1.4301/1.4307 / AISI 304/304L	60	414

Production Norm	Rolling	Tolerances	Welding factor
EN 10217-7	Hot rolled	D3 \ T3	V=1

Marking MANUFACTURER'S MARK - DIMENSION - STEELGRADE - HEAT N. - PRODUCTION NORM - EXECUTION - E.C. INSPECTOR - WORK INSPEKTOR

Manufacturing process Route = 04 Surface finishing W0

CHEMICAL COMPOSITION

Heat	% C	%Mn	%P	% S	%Si	%Cr	% Ni	% Mo	% Ti	% N
	0,000 - 0,030	0,000 - 2,000	0,000 - 0,040	0,000 - 0,010	0,000 - 1,000	17,500 - 19,500	8,000 - 10,000	0,000 - 0,000	0,000 - 0,000	0,000 - 0,110
0530893	0,027	1,680	0,031	0,001	0,310	18,030	8,050			0,070

The chemical values refer to the certificate issued by the steel mill according to EN 10088 / 10028-7 / ASTM A 240 and stored at our office.

TEST RESULTS

* (D) Direction: (L) Longitudinal, (T) Transverse - ** (P) Position: (W) Welding, (M) Material

Test unit	Test Class	(D) *	(P) **	TENSILE TEST in N/mm²=MPa				HARDNESS
				Yield Strength		Tensile Strength	Elongation	
				Rp 0,2%	Rp 1%	Rm	A %	HRB
				195 -	230 -	500 - 740	40 -	
T19022707	TC1	L	M	223	301	598	51	

Visual inspection OK	Drift expanding test UNI EN ISO 8493 OK	Sealing test UNI EN ISO 10893-1 OK
Check on dimensions OK	Flattenning test UNI EN ISO 8492 OK	Non destructive Eddy Current test UNI EN ISO 10893-2 OK
Antimixing test OK	Weld bend test EN ISO 5173 OK	Intergranular corrosion test N. P. N. P.

WE CERTIFY THAT THE MATERIAL SUPPLIED COMPLIES WITH THE REQUIREMENTS AGREED ON THIS ORDER

Notes:

Cerifications:	Document issued by:	Document confirmed by:
UNI EN ISO 9001 Dir. PED 2014/68/UE AQUAP from Nr. 7293-06-TU to Nr 7298-06-TU Qualifications: WPS/WPAR: UNI EN ISO 15609-4/UNI EN ISO 15614-11 WLD: UNI EN ISO 14732 operator NDT: UNI EN ISO 9712 operator	D. Ricco Quality engineering	O. Fiorentini Quality manager

Cert. Coll. - Rev. 5 - 10/17

NIOB FLUID s.r.o.
Ostrožská 1003, Hluk 687 25
ČESKÁ REPUBLIKA
IČO: 27712541
DIČ: CZ 27712541
tel. +420 572 419 822
e-mail:marketing@niobfluid.cz
http://www.niobfluid.cz/

MATERIAL CERTIFIKATE 3.1

EN 10204

Certified System

EN ISO 9001:2016
EN ISO 3834-2:2006
PED 2014/68/EU
Approved Cert.N°.:
QMS-3826/2015

PRODUCT: Wash cap 360°	**OUR CERTIFIKATE No.:** 53180065
MATERIAL: 1.4401-1.4404 - 316L	**DATE:** 23.03.2017
DIMENSIONS / SIZE: DN 065	
REQUIREMENTS: - According to AD-W2/AD-W10 DIN 17440 cooling at 1050°C, water cooling	
TRD 100 - EN 10272 - ASTM A276 A479 + ASME SA479	
NACE MR 01.75 - ASTM A 479 / ASME SA479 -EN 10277-1 CLASSE 3 EN 10272	
We certify that material supplied complies with the requirements agreed on order.	
Cold centerless ground drawn bars tolerance EN 10278	
Dimensional and visual check OK	
The materiál is resistant to the intergranular corrosion according to ISO 3651-2 (DIN 50914)	
An anti mixing test hass been effected	

MECHANICAL CHARACTERISTICS - TESTS

HEAT	BASE MATERIAL mm	Rm MPa	Rp 0,2% MPa	Rp 1% MPa	A %			HARDNESS HB
CH5528	65,00x3000	590	254	300	59,6			167
NORM REQUIREMENTS	min. max.	500 700	200	235	40			

HEAT	C	Si	Mn	P	S	Cr	Ni	Mo	Cu	N	Co
CH5528	0,022	0,450	1,690	0,043	0,015	16,840	10,030	2,020	0,250	0,070	0,100
NORM REQUIREMENTS	0,030	1,000	2,000	0,045	0,030	16,500 18,500	10,000 13,000	2,000 2,500	1,000	0,110	0,190

The chemical analysis and mechanical characteristics conform to the Base Material Certificate supplied by the pipe manufacturer (parts manufactured by NIOB FLUID) or by the fittings manufacturer (fittings re-sold by NIOB FLUID).

The original certificates issued by our suppliers are stored in the registers NIOB FLUID s.r.o.

Всеукраїнська експертна служба «УкрЕкспертиза»

СЕРТИФІКАТ ВІДПОВІДНОСТІ

Зареєстровано за № / *Зарегистрирован*: UA.276.092.08-19 від 02.04.2019 р. до 01.04.2020 р.

7307
код УКТ ЗЕД, ТН ВЭД

код ДКПП, ОКП

Продукція / *Продукция*: Арматура трубопровідна з'єднувальна з нержавіючої сталі 1.4301-1.4308, 1.4401-1.4408 (08Х18Н10, 03Х18Н11, 03Х12Н14М2) (асортимент згідно додатку, 102 позиції)

Відповідає вимогам / *Соответствует требованиям*: п.п. 3.2.2 - 3.2.5, 3.3.1, 3.4.3 ТУ У 28.1-37408023-003:2018

Виробник продукції / *Изготовитель продукции*: "Niob Fluid s.r.o.", Ostrozska 1003, 687 25 Hluk, Чеська Республіка

Сертифікат видано / *Сертификат выдан*: ТОВ " Ніоб Флюід Україна ", 03062, м. Київ, проспект Перемоги, буд. 67, код ЄДРПОУ 38080370, що діє за дорученням № б/н від 25.03.2019 р., виданим "Niob Fluid s.r.o.", Чеська Республіка

Додаткова інформація / *Дополнительная информация*: Продукція, що виготовляється серійно з 02.04.2019 р. до 01.04.2020 р., з урахуванням гарантійного терміну зберігання, наглядання один раз на рік.

Сертифікат видано органом сертифікації / *Сертификат выдан органом по сертификации*: ОС ТОВ „ВЕС „УКРЕКСПЕРТИЗА", 69006, м. Запоріжжя, вул. Північне шосе, 3, тел.: (061) 212-31-49

На підставі / *На основании*: Протоколів випробувань № 034/УЕ, № 035/УЕ від 29.03.2019 р., виданих ВЛ "Випробувальний центр" ТОВ "Всеукраїнська експертна служба" "УКРЕКСПЕРТИЗА", м. Запоріжжя, вул. Академіка Александрова, 1, свідоцтво № 06-0030/2017 від 07.08.2017 р., звіту про оцінювання від 02.04.2019 р.

Керівник органу з сертифікації / *Руководитель органа по сертификации*: К.О. Єрмоленко
ініціали, прізвище

ДОДАТОК 1

до сертифікату відповідності

№ UA.276.092.08-19 від 02.04.2019 р. до 01.04.2020 р.

Арматура трубопровідна з'єднувальна з нержавіючої сталі 1.4301-1.4308, 1.4401-1.4408 (08Х18Н10, 03Х18Н11, 03Х12Н14М2):

№ п/п	Артикул	Найменування
1.	2010	Різьбовий штуцер приварний
2.	2010R	Різьбовий штуцер приварний
3.	2110	Різьбовий штуцер приварний
4.	2011	Конічний штуцер приварний
5.	2011R	Конічний штуцер приварний
6.	2111	Конічний штуцер приварний
7.	2012	Різьбове з`єднання приварне – комплект
8.	2012R	Різьбове з`єднання приварне – комплект
9.	2112	Різьбове з`єднання приварне – комплект
10.	2030	Конічний штуцер заглушка
11.	2035	Різьбовий штуцер редукційний
12.	2036	Конічний штуцер редукційний
13.	2037	Різьбовий штуцер редукційний
14.	2038	Конічний штуцер редукційний
15.	2040	Фланець
16.	2041	Фланець
17.	2067	Фланець
18.	2070	Фланець
19.	2073	Фланець
20.	2079 DIN	Фланець
21.	2079 ISO	Фланець
22.	2042	Фланцеве з"єднання
23.	2051	Шлангова надставка
24.	2052	Шлангова надставка
25.	2053	Шлангова надставка
26.	2054	Шлангова надставка
27.	2057	Муфта
28.	2058	Муфта
29.	2059	Муфта

Керівник органу з сертифікації
Руководитель органа по сертификации

К.О. Єрмоленко
ініціали, прізвище

ДОДАТОК 2

до сертифікату відповідності

№ UA.276.092.08-19 від 02.04.2019 р. до 01.04.2020 р.

Арматура трубопровідна з'єднувальна з нержавіючої сталі 1.4301-1.4308, 1.4401-1.4408 (08Х18Н10, 03Х18Н11, 03Х12Н14М2):

№ п/п	Артикул	Найменування
30.	2063	Перехідник
31.	2064	Перехідник
32.	2065	Перехідник
33.	2066	Перехідник
34.	2080	Трубний ніпель
35.	2084	Трубна муфта
36.	2120	Патрубок Кламп
37.	2122	Обойма лита
38.	2124	Кламп глухий
39.	2125	Кламп Комплект
40.	2127	Кламп Комплект
41.	2130	Кламп для шлангів
42.	3001	Кутник
43.	3002	Кутник
44.	3004	Кутник
45.	3005	Кутник
46.	3006	Кутник
47.	3007	Кутник
48.	3008	Кутник
49.	3010	Кутник
50.	3013	Кутник
51.	3014	Кутник
52.	3015	Кутник
53.	3016	Кутник
54.	3017	Кутник
55.	3034	Кутник
56.	3035	Кутник
57.	3036	Кутник
58.	3101	Кутник

Керівник органу з сертифікації
Руководитель органа по сертификации

К.О. Єрмоленко
ініціали, прізвище

ДОДАТОК 3

до сертифікату відповідності

№ UA.276.092.08-19 від 02.04.2019 р. до 01.04.2020 р.

Арматура трубопровідна з'єднувальна з нержавіючої сталі 1.4301-1.4308, 1.4401-1.4408 (08Х18Н10, 03Х18Н11, 03Х12Н14М2):

№ п/п	Артикул	Найменування
59.	3102	Кутник
60.	3030	Відгалужуючий штуцер
61.	3032	Трубопровідне розгалуження
62.	3033	Трубопровідне розгалуження
63.	3040	Т-деталь
64.	3044	Т-деталь
65.	3045	Т-деталь
66.	3046	Т-деталь
67.	3047	Т-деталь
68.	3048	Т-деталь
69.	3049	Т-деталь
70.	3050	Т-деталь
71.	3140	Т-деталь
72.	3141	Т-деталь
73.	3041	Т-деталь довга
74.	3043	Т-деталь редукційна
75.	3054	Хрест
76.	3060	Футорка симетрична
77.	3062	Футорка симетрична
78.	3064	Футорка симетрична
79.	3061	Футорка ексцентрична
80.	3063	Футорка ексцентрична
81.	3065	Футорка внецентренная
82.	4442	Глушник
83.	4443	Штуцер з`єднувальний
84.	4450	Ніпель зовнішній
85.	5151	Гайковий діоптр
86.	5153	Трубний діоптр подвоєний
87.	5154	Гайковий діоптр з скребком

Керівник органу з сертифікації
Руководитель органа по сертификации

К.О. Єрмоленко
ініціали, прізвище

ДОДАТОК 4

до сертифікату відповідності

№ UA.276.092.08-19 від 02.04.2019 р. до 01.04.2020 р.

Арматура трубопровідна з'єднувальна з нержавіючої сталі 1.4301-1.4308, 1.4401-1.4408 (08Х18Н10, 03Х18Н11, 03Х12Н14М2):

№ п/п	Артикул	Найменування
88.	5155	Діоптр
89.	5156	Діоптр
90.	5157	Діоптр
91.	5158	Діоптр
92.	5159	Діоптр
93.	5317A	Муфта з`єднувальна
94.	5317B	Муфта рівня
95.	5330	Насичуюча свічка
96.	5348	Трубний фільтр
97.	5349	Трубний фільтр
98.	5350	Трубний фільтр
99.	5351	Трубний фільтр
100.	5451	Трубний фільтр
101.	7021	Обойма листова
102.	7022	Обойма листова з надставкою
Всього 102 позиції		

Керівник органу з сертифікації
Руководитель органа по сертификации

ТОВАРИСТВО З ОБМЕЖЕНОЮ ВІДПОВІДАЛЬНІСТЮ * УКРАЇНСЬКА ЕКСПЕРТНА СЛУЖБА * УКРЕКСПЕРТСЕРВІС * ОРГАН З СЕРТИФІКАЦІЇ * 38044695 * УКРАЇНА М. ЗАПОРІЖЖЯ *

К.О. Єрмоленко
ініціали, прізвище

ANELLA TELAIO A04.6EG080 ORD.203717/1 QTA.25

Acciaierie Valbruna S.p.A.

36100 VICENZA (Italia) - Viale della scienza, 25 z.i.
Telefono 0444.968211 - Fax 0444.963836
Stab.: 39100 BOLZANO (Italia) - Via A. Volta, 4/37
Telefono 0471.924111 - Fax 0471.924497

CERTIFICATO DI COLLAUDO - ABNAHMEPRUEFZEUGNIS - INSPECTION CERTIFICATE - CERTIFICAT DE RECEPTION

In conformità a : EN 10204 (2004) , 3.1 / ISO 10474 (2013) , 3.1
Nach/According to/Selon

Certificato nr. MEST435546 / 2019 /
Prüfung/Test/Essai

Cliente / Besteller/Purchaser/Client
FRATELLI LAVEGGI SNCDI LAVEGGI MAURO & FIGLI
VIA CADUTI IN GUERRA 12-LOC.VILLAVARA
41030 - BOMPORTO - MO

Ordine nr: 190022
Bestell
Your order
Commande

Conferma ordine nr: BO19000067
Werks/Our Order/Ref nr.

Avviso di Spedizione: A-BO19001574
Lieferanzeige/Packing list/B.L.

Stato di fornitura : Laminato Decapato Solubilizzato
Lieferzustand
Delivery state
Etat de livraison
Laminato

Tipo di Elaborazione: E+AOD
Erschmelzungsart
Melting process
Mode d'elaboration

Qualità: 1.4401/1.4404/316/316L
Werkstoff/Grade/Nuance

Marca: APML
Markenbezeichnung
Brand / Nuance

Produttore :
Hersteller/Item/Usine productrice

ACCIAIERIE VALBRUNA S.P.A.

Marchi di Fabbrica: AV
Zeichen des Liefernwerkes
Trade marks
Sigles de l'usine productrice

Punzone del Collaudatore: MR
Stempel des Werkssachverständigen
Inspector's stamp/Poinçon de l'assayeur

Punzonatura: 1.4401/4/316/L
Kennzeichnung
Marking
Marquage

SPECIFICHE : Anforderungen / Requirements / Exigences	Note: Aufzeichnungen / Notes / Notes
VAL STOCK 2010 1.4404/316L A	
MDS S01 5 316 A (0)	(0)Norsok-standard M-630 Edition 6, October 2013
AISI 316	
AISI 316L	
ASME SA182 2017 S31600 A (1)	(1)Section II Part A 2017 EDITION For products machined directly from bar refer to ASME SA479.
ASME SA182 2017 S31603 A (2)	(2)Section II Part A 2017 EDITION For products machined directly from bar refer to ASME SA479.
ASME SA193 2017 B8M CLASS 1 (3)	(3)Section II Part A 2017 EDITION
ASME SA276 2017 S31600 A (4)	(4)Section II Part A 2017 EDITION
ASME SA276 2017 S31603 A (5)	(5)Section II Part A 2017 EDITION
ASME SA320 2017 B8M CLASS1 (6)	(6)Section II Part A 2017 EDITION
ASME SA479 2017 S31600 A (7)	(7)Section II Part A 2017 EDITION
ASME SA479 2017 S31603 A (8)	(8)Section II Part A 2017 EDITION
ASTM A182 2018 S31600 A (9)	(9)For products machined directly from bar refer also to ASTM A479.
ASTM A182 2018 S31603 (A)	(A)For products machined directly from bar refer also to ASTM A479.
ASTM A193 2017 B8M CLASS 1	
ASTM A262 2015 PRACTICE E	
ASTM A276 2017 S31600 A	
ASTM A276 2017 S31603 A	
ASTM A320 2017A B8M CLASS1	
ASTM A370 2017 .	
ASTM A479 2018 S31600 A	
ASTM A479 2018 S31603 A	
ASTM E10 2017 .	
ASTM E8 2016A .	
DIN 17440 96 1.4401 A	
DIN 17440 96 1.4404 A	
EN 10088-3 2014 1.4401 A	
EN 10088-3 2014 1.4404 A	
EN 10272 2007 1.4401 A	
EN 10272 2007 1.4404 A	
ISO 148-1 2016 .	
ISO 6506-1 2014 .	
ISO 6892-1 2016 .	
NACE MR0103 2015 S31600 A (B)	(B)ANSI/NACE MR0103/ISO 17945 November 23, 2015
NACE MR0103 2015 S31603 A (C)	(C)ANSI/NACE MR0103/ISO 17945 November 23, 2015
NACE MR0175 2015 S31600 A (D)	(D)ANSI/NACE MR0175/ISO 15156-3, third edition November 23,2015
NACE MR0175 2015 S31603 A (E)	(E)ANSI/NACE MR0175/ISO 15156-3, third edition November 23,2015

QUALITY MANAGEMENT SYSTEM CERTIFIED BY LLOYD'S REGISTER ACCORDING TO ISO 9001 : 2015, IATF 16949 : 2016, AS 9100D

Vicenza, 08/07/19 VCQ052 - MEST435546	**Direzione Qualità** Qualitätsmanagement/Quality Management/Gestion Qualité **R.BERTELLI**	**Direzione Prodotto** Produktmanagement/Product Management/Direction Produit **P.MESSORI**	Pagina 1 di 3

Acciaierie Valbruna S.p.A.

36100 VICENZA (Italia) - Viale della scienza, 25 z.i.
Telefono 0444.968211 - Fax 0444.963836
Stab.: 39100 BOLZANO (Italia) - Via A. Volta, 4/37
Telefono 0471.924111 - Fax 0471.924497

CERTIFICATO DI COLLAUDO - ABNAHMEPRUEFZEUGNIS - INSPECTION CERTIFICATE - CERTIFICAT DE RECEPTION

In conformità a : EN 10204 (2004) , 3.1 / ISO 10474 (2013) , 3.1
Nach/According to/Selon

Certificato nr. MEST435546 / 2019 /
Prüfung/Test/Essai

Cliente / Besteller/Purchaser/Client
FRATELLI LAVEGGI SNCDI LAVEGGI MAURO & FIGLI
VIA CADUTI IN GUERRA 12-LOC.VILLAVARA
41030 - BOMPORTO - MO

Ordine nr: 190022
Bestell
Your order
Commande

Conferma ordine nr: BO19000067
Werks/Our Order/Ref nr.

Avviso di Spedizione: A-BO19001574
Lieferanzeige/Packing list/B.L.

Stato di fornitura : Laminato Decapato Solubilizzato
Lieferzustand
Delivery state
Etat de livraison
Laminato

Tipo di Elaborazione: E+AOD
Erschmelzungsart
Melting process
Mode d'elaboration

Qualità: 1.4401/1.4404/316/316L
Werkstoff/Grade/Nuance

Marca: APML
Markenbezeichnung
Brand / Nuance

Produttore :
Hersteller/Item/Usine productrice

ACCIAIERIE VALBRUNA S.P.A.

Marchi di Fabbrica:
Zeichen des Liefernwerkes
Trade marks
Sigles de l'usine productrice

Punzone del Collaudatore: MR
Stempel des Werkssachverständigen
Inspector's stamp/Poinçon de l'assayeur

Punzonatura: 1.4401/4/316/L
Kennzeichnung
Marking
Marquage

Tolleranza: Tol. DIN 1017
Tolleranza/Allowance/Tolerance

Pos. nr. Pos. nr. Item nr. Nr. de poste	Oggetto Gegenstand Product description Descrip. du produit	Dimensioni - mm Abmessungen Dimension Dimension	Lunghezza - mm Lange Length Longueur	Colata Schmelze Heat Coulée	Pezzi Stückzahl Pieces Pieces	Peso - KG Gewicht Weight Poids	Lotto nr. Losnr. Lot nr. Lot nr.
0020	Piatto	30,000 x 12,000	4050/ 4100	280309		1559,0	901003300

TEST ALLO STATO DI FORNITURA
Test on delivery condition Prüefung auf lieferbereitem produkt test a l'etat de fourniture Prueba sobre el material así come entregado

1) L=longitudinale/längs, T=trasversale/quer, Q=Tangenziale/tangential

TEST	Provetta/ Probestab Specimen/Eprouvette Larg.diam Spess. Breite Diam. Dicke Width Diam. Thickness Larg. diam. epais mm	°C		Posiz. Saggio Probentage Location Emplacement 1)	Snervamento Streckgrenze Yield Stress Limite elastique Rp 0,2% N/mm2	Snervamento Streckgrenze Yield Stress Limite elastique Rp 1% N/mm2	Resistenza Zugfestigkeit Tensile strength Resistance à traction Rm N/mm2	Allungamento Bruchdehnung Elongation Allongement A5 %	Allungamento E 4d %	Strizione Einschnürung Reduction of area Striction Z %	Strizione RA %	Resilienza Kerbschlagarbeit Impact Value Resilience KV J			Durezza Haerte Hardness Durete HB		
Valori richiesti Anforderungen/Required values Valeurs démandées		min max			205	240	515 690	40	40	-	50	100			- 215		
A	10	20	L		276	318	600	52	54	67	67	248	249	250	174		

TEST ALLO STATO DI FORNITURA
Test on delivery condition / Prüefung auf lieferbereitem produkt / Test a l'etat de fourniture / Prueba sobre el material así come entregado

TEST		min	max	
A	Dimensioni grano x ASTM E112			6

Mechanical properties according to ASTM A370.
Brinnell hardness according to ASTM E10
Tensile testing according to ASTM E8
Impact testing according to ISO 148-1
Brinnell hardness according to ISO 6506-1
Tensile testing according to ISO 6892-1

Analisi chimica
Chemische Zusammensetzung/Chemical Analysis/Analyse chimique

Colata /Heat Schmelze/Coulée	C %	Si %	Mn %	Cr %	Mo %	Ni %	P %	S %	N %						
min -	-	-	-	16,50	2,00	10,00	-	-	-	-	-	-	-	-	-
max 0,030	1,00	2,00	18,00	2,50	13,00	0,045	0,030	0,100	-	-	-	-	-	-	-
280309	0,014	0,45	1,35	16,72	2,06	10,08	0,030	0,025	0,082						

QUALITY MANAGEMENT SYSTEM CERTIFIED BY LLOYD'S REGISTER ACCORDING TO ISO 9001 : 2015, IATF 16949 : 2016, AS 9100D

Vicenza, 08/07/19 VCQ052 - MEST435546	Direzione Qualità Qualitätsmanagement/Quality Management/Gestion Qualité R.BERTELLI	Direzione Prodotto Produktmanagement/Product Management/Direction Produit P.MESSORI	Pagina 2 di 3

Acciaierie Valbruna S.p.A.

36100 VICENZA (Italia) - Viale della scienza, 25 z.i.
Telefono 0444.968211 - Fax 0444.963836
Stab.: 39100 BOLZANO (Italia) - Via A. Volta, 4/37
Telefono 0471.924111 - Fax 0471.924497

CERTIFICATO DI COLLAUDO - ABNAHMEPRUEFZEUGNIS - INSPECTION CERTIFICATE - CERTIFICAT DE RECEPTION

In conformità a : EN 10204 (2004) , 3.1 / ISO 10474 (2013) , 3.1
Nach/According to/Selon

Certificato nr. MEST435546 / 2019 /
Prüfung/Test/Essai

Cliente / Besteller/Purchaser/Client
FRATELLI LAVEGGI SNCDI LAVEGGI MAURO & FIGLI
VIA CADUTI IN GUERRA 12-LOC.VILLAVARA
41030 - BOMPORTO - MO

Ordine nr: 190022
Bestell
Your order
Commande

Conferma ordine nr: BO19000067
Werks/Our Order/Ref nr.

Avviso di Spedizione: A-BO19001574
Lieferanzeige/Packing list/B.L.

Stato di fornitura : Laminato Decapato Solubilizzato Laminato
Lieferzustand
Delivery state
Etat de livraison

Tipo di Elaborazione: E+AOD
Erschmelzungsart
Melting process
Mode d'elaboration

Qualità: 1.4401/1.4404/316/316L
Werkstoff/Grade/Nuance

Marca: APML
Markenbezeichnung
Brand / Nuance

Produttore :
Hersteller/Item/Usine productrice

ACCIAIERIE VALBRUNA S.P.A.

Marchi di Fabbrica:
Zeichen des Liefernwerkes
Trade marks
Sigles de l'usine productrice

Punzone del Collaudatore:
Stempel des Werkssachverständigen
Inspector's stamp/Poinçon de l'assayeur

Punzonatura: 1.4401/4/316/L
Kennzeichnung
Marking
Marquage

Corrosion test in 16% sulfuric acid and copper sulfate solutions

Test standard: ASTM A262-Practice E

Test	Heat treatment before test	Length of Period (h)	Test temp (°C)	Bend Angle (°)	Ø spindle (mm)	Result of visual inspection at 20 x magnification after bend test	Result
Intergranular corrosion	Sensitization	15	boil	180	5	Absence of cracks	**SATISFACTORY**

Corrosion test in 16% sulfuric acid and copper sulfate solutions

Test standard: UNI EN ISO 3651-2 Method A

Test	Heat treatment before test	Length of Period (h)	Test temp (°C)	Bend Angle (°)	Ø spindle (mm)	Result of visual inspection at 20 x magnification after bend test	Result
Intergranular corrosion	Sensitized T1	20	boil	90	5	Absence of cracks	**SATISFACTORY**

Reduction ratio = 90,0 : 1
Solution annealing by process annealing 1040°C min /
/ cooling water

Sono state soddisfatte tutte le condizioni richieste
Die gestellen Anforderungen sind it. Anlage erfüllt
The material has been furnished in accordance with the requirements
Le materiel â eté trouvé conforme aux exigences

Controllo antimescolanza: OK
Verwechslungprüfung: spectralanalytisch durchgeführt
Antimixing testing performed: OK
Contrôle antimelange falt: r.a.s.

Controllo visivo e dimensionale: soddisfa le esigenze
Besichtigufig und Ausmessung: ohne Beanstandung
Visual inspection and dimensional checks:satisfactory
Contrôle visuel et dimensions: satisfaisant

Melted and manufactured in Italy No welding or weld repair Material free from Mercury contamination

We declare that the finished product is checked for radioactive contamination through Portal System when it leaves the production plant.

The Quality Management System is also Certified according Pressure Equipment Directive 2014/68/EU Annex 1,chapt.4.3 by TÜV and LLOYD`S
Any act of tampering, modification, alteration, counterfeiting and/or falsification and/or any other action which modifies the contents of this test certificate shall constitute a violation of applicable civil and criminal laws. Acciaierie Valbruna shall protect its rights and interests before any competent court, authority and jurisdiction.
Maxival and/or Valplus grades/products are manufactured with ladle techniques to control composition, distribution, size and shape of non-metallic inclusions for improved machinability.
The supplied product conforms to requirements expressly requested by the purchaser and conforms to requirements specified by certified norms and standards. Should the product be used for more severe, critical and/ or in any case different applications than those the material is generally intended for, any different and/or supplementary requirements shall be specifically demanded, at least, upon order of the Product by the Purchaser. Acciaierie Valbruna SpA shall not be responsible for any improper use of the Products.

WSPD5B1B7D724A9A4A34E4E62A7E54A53E9F

QUALITY MANAGEMENT SYSTEM CERTIFIED BY LLOYD'S REGISTER ACCORDING TO ISO 9001 : 2015, IATF 16949 : 2016, AS 9100D

Vicenza, 08/07/19 VCQ052 - MEST435546	**Direzione Qualità** Qualitätsmanagement/Quality Management/Gestion Qualité **R.BERTELLI**	**Direzione Prodotto** Produktmanagement/Product Management/Direction Produit **P.MESSORI**	Pagina 3 di 3

MARCEGAGLIA SPECIALTIES

Type/Tipo 3.1 CERTIFICATO DI COLLAUDO EN10204 Number/Numero 10720023970 Creato il 15/01/2020

- QMS approvato sec AD-2000 W0 con Cert 01 202 I/Q-08 5131 di TUV Rheinland (0035), cert. PED 2014/68/UE Annex I §4.3 by TUV Rheinland (0035)
- Materiale secondo AD2000 W2 - W10 in ref to EN10028-7
- Materiale conforme a NACE MR0175/MR0103 - ISO15156-1/ISO15156-3

Customer/Cliente	Consignee/Destinatario Merci	Delivery/N° Consegna 8251801445	Quality Control/Controllo Qualità	Pages/Pagine
SIDERMARIOTTI S.R.L. VIA SAN ROCCO 12 25026 PONTEVICO IT	SIDERMARIOTTI S.R.L. VIA SAN ROCCO 12 25026 PONTEVICO IT	Of/Del 15/01/2020 Delivery note nr/N° doc. di trasp. 1007000441	Q.M.D./RESP. L.Solazzi Plant Of/Stab. Gazoldo	1/1

Material/Codice Materiale	Norm/Norma	Order Nr/ordine	Client Order/Ordine cliente
50602280	EN10028-7,EN10088-2,EN10088-4,ASTM A240, ASME SA240, ASTMA480, ASME SA480	1191153867/10	MAIL MARCO 09.01
Description/Descrizione: CXF02C 3,00 x 1250 4404/316L SR 6/15 FINITURA "2B"	Quality/Qualità: X2CrNiMo17-12-2, WNR1.4404, 316L / AISI316, X5CrNiMo17-12-2, WNR1.4401, 316		Client Date/data cliente 14/01/2020

Item	Batch/N° Partita	Heat/Colata	Quantity/Q.tà	Dimensional tolerances/Tol.Dimensionali	Steel Processing/Elaborazione acciaio	Mark Tester/Marchio Collaudatore
1	19YT008276	X1XW	14890 KG	EN9445-2	Forno ad arco-VOD/AOD, colata continua, trattamento di solubilizzazione a 1050°C	- Marchio del collaudatore: CQ3
					- Norme ASME Sec.II Part.A Ed. 2019	Terms of Delivery/Condizioni di Consegna

Batch/N° Partita	tipoChimica	Marc	C (%)	Si (%)	Mn (%)	P (%)	S (%)	Cr (%)	Ni (%)	Mo (%)	N (%)
19YT008276	Product	19H2008081	.018	.377	1.288	.0310	.0010	16.710	10.160	2.043	.0450

Batch/N° Partita	Posizione prova	Direzione Prova	Marc	Rm [N/mm²]	Rp 0,2 [N/mm²]	RP 1 [N/mm²]	A5D (%)	A50 (%)	HRB B	HRB T
19YT008276	B	T	19H2008081	602	287	335	47.8	47.2	79	79

Test Position/Posizione Prova	Test Direction/Direzione Prova	Note sui valori meccanici:	Altri controlli:
B=Coda del coil C=Centro del coil T=Testa del coil	T=Senso Trasversale L=Senso Longitudinale	- Un solo set di valori meccanici per ogni partita come autorizzato da TUV Rheinland (01/03/2012)	- Controllo visivo, dimensionale ed analisi chimica OK - Test di corrosione EN ISO3651-2 Metodo A e ASTM A262p pract.E OK

Remarks/Note:
- Finitura Superficiale 2B
- Certifichiamo che i prodotti sopra elencati sono conformi alle prescrizioni dell'ordine
- Documento validato in conformità ad EN10204 par. 5
- Le Norme citate sono intese nell'edizione in corso di validità al momento dell'ordine
- Durabilità: NPD
- Sostanze Pericolose: NPD
- Per impieghi strutturali, costruzioni e ingegneria civile
- DoP disponibili su http://www.marcegaglia.com/brochure/e/e/quality/dop.html
-finitura superficiale 2B

CE 0474 13 MARCEGAGLIA SPECIALTIES EN 10088-4:2009

COPERCHIO A04.6EG080 ORD.203717/1 QTA.25

TELAIO A04.6EG080 ORD.203717/1 QTA.25

ref.171131 - Item -7064607 - Quantity 512 kg - NIM Acciai Vender NC6464 - Heat - Product ID 17YT003112
,r n. 746138 - 29/08/2017

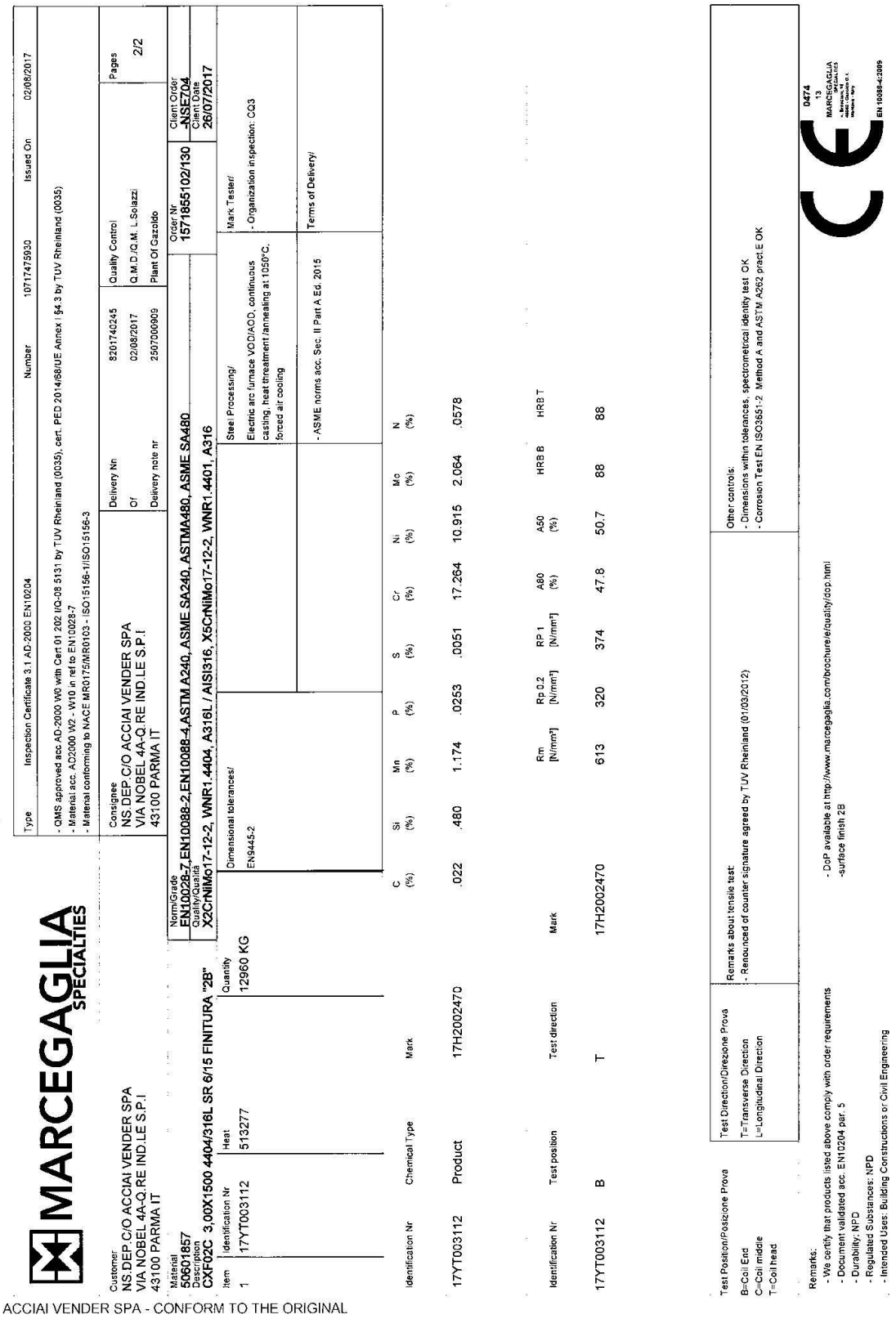

MARCEGAGLIA SPECIALTIES

Customer
NS.DEP C/O ACCIAI VENDER SPA
VIA NOBEL 4A-Q.RE IND.LE S.P.I
43100 PARMA IT

Material
50601857
Description
C/XF02C 3,00X1500 4404/316L SR 6/15 FINITURA "2B"

Type: Inspection Certificate 3.1 AD-2000 EN10204
Number: 10717475930
Issued On: 02/08/2017

- QMS approved acc AD-2000 W0 with Cert 01 202 IIQ-08 5131 by TUV Rheinland (0035), cert. PED 2014/68/UE Annex I §4.3 by TUV Rheinland (0035)
- Material acc. AD2000 W2 - W10 in ref to EN10028-7
- Material conforming to NACE MR0175/MR0103 - ISO15156-1/ISO15156-3

Consignee
NS.DEP C/O ACCIAI VENDER SPA
VIA NOBEL 4A-Q.RE IND.LE S.P.I
43100 PARMA IT

Delivery Nn: 8201740245
Of: 02/08/2017
Delivery note nr: 2507000909

Quality Control
Q.M.D./Q.M. L.Solazzi
Plant Of Gazoldo

Pages: 2/2

Order Nr: 157185S102/130

Client Order: NSE704
Client Date: 26/07/2017

Norm/Grade: EN10028-7,EN10088-2,EN10088-4,ASTM A240, ASME SA240, ASTMA480, ASME SA480
Quality/Quality: X2CrNiMo17-12-2, WNR1.4404, A316L / AISI316, X5CrNiMo17-12-2, WNR1.4401, A316

Item	Identification Nr	Heat	Quantity
1	17YT003112	513277	12960 KG

Dimensional tolerances/ EN9445-2

Steel Processing/ Electric arc furnace VOD/AOD, continuous casting, heat threatment /annealing at 1050°C, forced air cooling

Mark Tester/
- Organization inspection: CQ3

- ASME norms acc. Sec. II Part A Ed. 2015

Terms of Delivery/

Identification Nr	Chemical Type	Mark	C (%)	Si (%)	Mn (%)	P (%)	S (%)	Cr (%)	Ni (%)	Mo (%)	N (%)
17YT003112	Product	17H2002470	.022	.480	1.174	.0253	.0051	17.264	10.915	2.064	.0578

Identification Nr	Test position	Test direction	Mark	Rm [N/mm²]	Rp 0.2 [N/mm²]	RP 1 [N/mm²]	A80 (%)	A50 (%)	HRB B	HRB T
17YT003112	B	T	17H2002470	613	320	374	47.8	50.7	88	88

Test Position/Posizione Prova
B=Coil End
C=Coil middle
T=Coil head

Test Direction/Direzione Prova
T=Transverse Direction
L=Longitudinal Direction

Remarks about tensile test:
- Renounced of counter signature agreed by TUV Rheinland (01/03/2012)

Other controls:
- Dimensions within tolerances, spectrometrical identity test OK
- Corrosion Test EN ISO3651-2 Method A and ASTM A262 pract.E OK

Remarks:
- We certify that products listed above comply with order requirements
- Document validated acc. EN10204 par. 5
- Durability: NPD
- Regulated Substances: NPD
- Intended Uses: Building Constructions or Civil Engineering
- DoP available at http://www.marcegaglia.com/brochurele/quality/dop.html
-surface finish 2B

0474
13
MARCEGAGLIA
EN 10088-4:2009

ACCIAI VENDER SPA - CONFORM TO THE ORIGINAL

COPERCHIO D08.6EG500 ORD.203717/2 QTA.23

SIDERMARIOTTI SRL

outokumpu

INSPECTION CERTIFICATE 3.1
DIN EN 10204 3.1

Certificate No. / Zeugnis Nr. / N° du certificat: 832938/001
Page / Seite / Page: 1(01)
Date / Datum / Date: 28.01.2020

Delivery address, Empfänger, Lieu de livraison:
OUTOKUMPU S.P.A.
VIA FUSTAGNO,21
T7
26012 CASTELLEONE
ITALY

OUTOKUMPU SPA
VIA AGNELLO, 8
20121 MILANO
ITALY

Requirements, Anforderungen, Exigences:
EN 10088-4:2009
AD 2000 W2, W10 & EN 10028-7:2016
ASTM A240/A240M
ASME SA-240/SA-240M II A ED. 2019

Our Order No. / Unser Auftrag Nr. / Notre commande n°: 360018641
Your order, Ihre Bestellung, Votre commande: 802168

Product, Erzeugnisform, Produit: COIL , STAINLESS STEEL

Mark of Manufacturer / Zeichen des Lieferwerkes / Signe de producteur: outokumpu
Process / Erschmelzungsart / Mode de fusion: AOD

Inspector's stamp / Zeichen d. Sachverst. / Poinçon de l'expert

Grade, Werkstoff, Nuance: 1.4404 1.4401 TYPE 316L

Tolerances Toleranzen, Tolérances: EN ISO 9445-2

Marking, Kennzeichnung, Marquage: 1.4404 2B

Marks, Versandzeichen, Marques:

Line / Reihe / Ligne	Item / Position / Poste	Charge-test No. / Schmelze-Probe Nr. / Coulée n°	Size, Abmessungen, Dimensions	Quantity / Stückzahl / Nombre	Weight, Gewicht, Poids	Finish / Ausführung / Fini EN/ASTM
1	7	15726 4	2,5 X 1500 MM		11640 KG	2B

CE 14 0045-CPR-0567

Charge no. / Schmelze Nr. / Coulée n°	Chemical composition, Chemische Zusammensetzung, Composition chimiques										
	C %	Si %	Mn %	P %	S %	Cr %	Ni %	MO %	N %		
15726	0,020	0,48	0,91	0,030	<.001	17,1	10,1	2,03	0,049		

Line / Reihe / Ligne	Mechanical properties, Mechanische Eigenschaften, Caracteristiques mecaniques								
	Sample ID / Proben ID / Échantillon	Rp0.2 MPa	Rp1.0 MPa	Rm MPa	%	A50 %	A80 %	Hardness / Härte,Durate / HBW	
1	01	294	324	605		56	55	153	
	02	288	317	597		59	57	157	

Tensile test, Zugversuch, Essai de traction: ISO 6892-1:2009 A224 SAMPLES PERPENDICULAR TO THE ROLLING DIRECTION

APPROVED ACC.TO AD2000-W0 WITH VERIFICATION OF THE UNIFORMITY OVER THE STRIP LENGTH. CERTIFIED ACC.TO PED 2014/68/EU BY TÜV NORD REG. NO. 0045. DOPS ACC. TO CPR AVAILABLE ON THE WEB PAGE BY STEEL NUMBER

Identity test, Verwechslungsprüfung, Controle d'identification: OK
Sizes, Abmessungen, Dimensions: OK
Surface, Oberfläche, Surface: OK
Test of intergran. corros, Prüfung auf Interkrist. Korros, Test de corros. intercrist.
EN ISO 3651-2 A: OK

ASTM A240/A240M
ASME SA-240/SA-240M II A ED. 2019
TYPE 316
EN 10088-2:2014/1.4404, 1.4401
NACE MR0103/ISO 17945 AND
NACE MR0175/ISO 15156-1 / NACE MR0175/ISO 15156-3
HEAT TREATMENT 1070 C
SOLUTION ANNEALED
RAPID COOLING WITH AIR AND WATER

COPY CONFORMING TO THE ORIGINAL OUTOKUMPU S.p.A.
NAME
SIGNATURE

We certify that the above mentioned products comply with the terms of the order contract.
Wir bestätigen, dass die Lieferung den Vereinbarungen der Bestellannahme entspricht.
Nous certifions que les produits énumérés ci-dessus sont conformes aux prescriptions de la commande.

This test certificate is made by controlled ADP-system and is valid without signature.
Dieses Zeugnis wurde von einem überprüften Datenverarbeitungssystem erstellt und ist ohne Unterschrift gültig.
Ce certificat a été établi par un systeme informatique controlé et est valide sans signature.

Outokumpu Stainless Oy

Authorized inspector / Werkssachverständiger / Inspecteur autorisé: A-E KYÖSTÄJÄ

FI-95490 Tornio, Finland
Tel. +358 16 4521,email certificate.tornio@outokumpu.com,
www.outokumpu.com
Domicile: Tornio, Finland. Business Identity Code 0823315-9

TELAIO D08.6EG500 ORD.203717/2 QTA.23

Herstellerwerk / Manufacture's works / Usine productrice

outokumpu

Art der Prüfbescheinigung / Type of inspection document / Type du document

ABNAHMEPRUEFZEUGNIS
INSPECTION CERTIFICATE
CERTIFICAT DE RECEPTION
nach / according to / suivant
EN 10204-3.1

Bescheinigungsnr. 08.04.2019
Document number
Numéro de document
1000715797 /

Seite / Page / Pago:
1 / 1

35667 Dillenburg PF 1751

Besteller/Empfänger / Customer/Consignee / Acheteur/Destinataire

SIDERMARIOTTI SRL
Via S. Rocco, 12
25026 PONTEVICO (BS)
Tel. 0309307687 - Fax 030993029
Partita IVA 00 64991 098 1
Codice Fisc.Az. 01 71482 017 0

Kundenbestellnr. / Customer's order number / Numéro de la commande du client
09 180324

Werksauftragsnr./ Manufacturer's works order no/ N° de la commande de l'usine productrice
900522113 / 005

Lieferanzeige Nr. / Delivery Note No. / Avis d' expédition N°.
87962943 / 010

Erzeugnis / Product / Produit
BAND/COIL/ROULEAU

Lieferbedingungen / Terms of delivery / Conditions de livraison	Stahlsorte und Gütegruppe / Steel grade and quality / Nuance de l'acier
EN 10088-2	NIROSTA 1.4404 / 1.4401
EN 10088-4	TYPE 316 L / 316
ASTM A 240/A 240M	
ASME SA 240/SA 240M Sec.II Part A Ed.2017	
EN 10028-7 AD 2000 W2	
Richtlinie 2014/68/EU	
AD 2000 W10	
NACE STANDARD MR0175	

Kundenmaterial-Nr. Customer's material number N° de matière du client	Maße des Erzeugnisses (Dicke / Breite / Länge) Product dimensions (Thickness / Width / Length) Dimensions du produit (Epaisseur / Largeur / longeur)	Herstellart Steelmaking proc. Mode d' elabor.	Ausführung Finish Fini
	2,5 mm x 1500,0 mm	AOD	IIId / 2R

Paket-Nr. Packing-No. N° Paletta	Stückzahl No of pieces N° de pièces	Ist-Gewicht Actual weight Masse affective	Ident.-Nr. Erzeugnis Ident.-No of product Ident.-N° du produit	Schmelzennr. Cast number Id. de la coulée	Proben-Id. Sample Id. Empl.du prélèvement	Proben-Id. Sample Id. Empl.du prélèvement
5781940	1	7235 KG	483796	329466	1003555806	1003555807
5781941	1	9845 KG	483796	329466	1003555806	1003555807
5783407	1	7220 KG	484078	329681	1003558016	1003558017
	3	24300 KG				

Schmelze / Cast-No./ Coulée N°	Chemische Zusammensetzung / Chemical composition/ Composition chimique									
	% C	% Si	% Mn	% P	% S	% Cr	% Mo	% Ni	% N	
329466	0,020	0,47	1,03	0,033	0,0010	17,10	2,06	10,10	0,041	
329681	0,015	0,48	0,96	0,035	0,0010	17,10	2,02	10,10	0,032	

Prüflos/Inspection lot Lot de contrôle Proben-Id./-Lage Sample Id./-Position Ident./empl.du prélèvement	QUER										
	Rp0,2% MPa	Rp1% MPa	Rm MPa	A80 %	A2" %	HV HV	HRB HRB				
1003555806	326	357	610	55,1	55,1	159	80,0				
1003555807	335	368	625	53,8	53,8	163	81,0				
1003558016	327	360	624	54,9	54,9	168	81,0				
1003558017	326	370	619	55,0	55,0	168	80,0				

Beständig gegen Interkrist. Korros./Resistant to intercryst. corros./Resistant à la corros. intercrist.: EN ISO 3651-2 O.B.

Maße-Oberfläche/Dimensions-Surface/Dimensions-Surface: I.O.

Verwechslungsprüfung (Spektralanalyse)/Steel grade verification (PMI)/Contrôle d'identification (analyse spectrale): I.O.

WAERMEBEHANDLUNG : 1050 GRAD C / LUFT

TRAITEMENT THERMIQUE : 1050 GRADE C / AIR

HEAT - TREATMENT : 1050 DEGREE C / AIR

Aussteller der Bescheinigung / Originator of the document / Auteur du document

Outokumpu Nirosta GmbH
Dieses Zeugnis wurde maschinell erstellt
Werk Dillenburg

Die Lieferung entspricht der Bestellung
The delivery meets the order agreement
La livraison correspond à la commande

Abnahmebeauftragter/ Inspector/ Expert
Jens Lewandowski
Tel.:+ 49 (2771) 380-315
Certificates.Nirosta@outokumpu.com

Stempel des (der) Abnahmebeauftragten
Receiving agent's stamp
Poinçon de l'agent réceptionnaire

QA

Datum der Ausstellung und Bestätigung
Date of issue and validation
date d'emission et validation
08.04.2019

CE
0432-CPR-00052-1

COPERCHIO D08.6EG420 ORD.203717/3 QTA.21

outokumpu
high performance stainless steel

INSPECTION CERTIFICATE EN 10204-3.1

Certificate No	Revision	Outokumpu Sales Order No	
13934	00	9000004161	
Production mill	Date	Delivery No.	Customer Order No / LC/DC No
Dillenburg Plant	26 Feb 2020	8000014186	005031-01

Sold To:	Product	Grade
Sidermariotti S.R.L Via San Rocco 12 25026 PONTEVICO BS ITALY	Stainless Steel Cold Rolled Strip, Slit edge, Supra 316L/4404 Finish BA	1.4401 1.4404 TYPE 316 / UNS S31600 TYPE 316L / UNS S31603

Ship to:	Requirements
Sidermariotti S.R.L Via San Rocco 12 25026 PONTEVICO BS ITALY	ASTM A240 / A240M-18 EN 10028-7:2016 EN 10088-4:2009 EN 10088-2:2014 AD 2000 W 2, Ausg. 09.2016, W 10, Ausg. 05.2016 & EN 10028-7:2016 ASME SA-240/SA-240M BPVC.II.A-2019 ASTM A480/A480M – 19a EN ISO 9445-2:2010 NACE MR0175/ISO 15156-1:2015 & NACE MR0175/ISO 15156-3:2015

Mark of manufacturer	Process	Inspector's Stamp
outokumpu	E+AOD	QA

Sales order Item	Dimensions	Quantity (PCS)	Weight	Heat No	Lot No	Identification No. of Product	Customer's Material No
100	2,50 X 1500,0 mm	2	21770 kg	500449		407586	

Chemical Composition(%)

Heat No - 500449	Country of Melt - Sweden	C % 0,018	Si % 0,46	Mn % 1,27	P % 0,032	S % 0,001	Cr % 17,1	Mo % 2,02	Ni % 10,1	N % 0,047	

Test Results (T=Transverse, L=longitudinal, D=Diagonal, 01=Beginning, 02=Middle, 03=End, RT=Room temperature)

		EN ISO 6892-1 / ASTM A370 (RT)					ASTM A370 / EN ISO 6508-1
Identification No. of Product	Sample ID	RP0.2 MPa	RP1.0 MPa	RM MPa	A50 %	A80 %	HARDNESS HRBW
407586	3 T 659	315	346	622	60	55	81
407586	1 T 659	289	318	617	60	54	80
		EN ISO 3651-2 A					
Identification No. of Product	Sample ID	INTERGRANULAR CORROSION A	PMI				
407586	3 T 659	OK	OK				
407586	1 T 659	OK	OK				

Packing Information

Delivery Item	Identification No. of Product	Batch No	Quantity(pcs)	Weight	Coil Length
10	407586	A035719900	1	11030 kg	
20	407586	A035720000	1	10740 kg	

Solution annealed at 1075 °C/1967 °F

Rapidly cooled with water and air

Country of Origin: Germany

Certified acc. to PED 2014/68/EU by TÜV NORD, notified body, Reg-No. 0045

DOPS acc. to CPR available on the web page by steel number

Marking, visual and dimensional inspection: Approved

Outokumpu Nirosta GmbH
Kasseler Straße 100
35683 Dillenburg, Germany
Tel.: +49 (0) 2771 390-315
Company Domicile: Krefeld
Commercial Register: District Court Krefeld HRB 12511
VAT-ID: DE811 660170

This material is found to comply with order requirements

Authorized Inspector
certificates.nirosta@outokumpu.com

CE 0432-CPR-00052-1

This document shall not be altered or reproduced, except in full. Fraudulent, ficticious, false statements or entries may be prosecuted by law.

TELAIO D08.6EG420 ORD.203717/3 QTA.21

Seriale Certificato 00000000000000398490 File R:\A0002\00000000000000398490_ART_ICOL_10NA03501000044.TIF

ACERINOX EUROPA
FABRICA DEL CAMPO DE GIBRALTAR
PABLONES (LOS BARRIOS)
TENO. (34) - 956 62 93 00
FAX (34) - 956 62 93 11
P.O. BOX 63
11370 LOS BARRIOS (CADIZ)
ESPAÑA

by Accredited Body

INSPECTION CERTIFICATE
CERTIFICADO DE INSPECCION 3.1

ACCORDING TO / SEGÚN: EN 10204

CERTIFICATE Nº / CERTIFICADO Nº: F0 2019 11375 70002 *

CUSTOMER / CLIENTE	OUR ORDER Nº / N/PEDIDO	YOUR ORDER Nº / S/PEDIDO
OIKI ACCIAI INOSSIDABILI SPA VIA PARADIGNA, 95/A 43100 PARMA ITALIA	SO 77007	BO-56

TRADE MARK / SELLO DEL FABRICANTE	INSPECTOR'S STAMP / SELLO DEL INSPECTOR	STEELMAKING PROCESS / PROCESO DE ACERÍA
ACERINOX	4511	A.O.D.

REQUIREMENTS / NORMAS APLICABLES	INTERGRANULAR CORROSION / CORROSIÓN INTERGRANULAR	GRADE / MATERIAL		FINISH / ACABADO
EN 10028-7/TRB 100/AD-2000-MERKBLATT W0/W2/W10 PED2014/68/EU	EN ISO 3651-2	Acx 240	1.4404/1.4401	2B
EN 10088-2:2014	EN ISO 3651-2	Acx 240	1.4401	2B
ASTM A240Ed17/A480Ed17-ASME SecIIA SA240/SA480Ed17	ASTM-A-262 PRACTICA E	Acx 240	316	2B
EN 10088-2:2014	EN ISO 3651-2	Acx 240	1.4404	2B
ASTM A240Ed17/A480Ed17-ASME SecIIA SA240/SA480Ed17	ASTM-A-262 PRACTICA E	Acx 240	316L	2B

COIL / BOX / BOBINA / CAJA	CONTENT / CONTENIDO	DIMENSIONS (mm) / DIMENSIONES: THICKNESS / ESPESOR	WIDTH / ANCHO	LENGTH / LARGO	MARKS / MARCA	QUANTITY / CANTIDAD	TEST Nº / PROBETA
01W0KD A	01W0KD A	2,500	1500,00		23	1	01W0KD C
01W0KD B	01W0KD B	2,500	1500,00		24	1	01W0KD C

CHEMICAL ANALYSIS / COMPOSICIÓN QUÍMICA (%)

HEAT Nº / COLADA	C	CR	MN	MO	N	NI	P	S	SI	CO	CU
W0KD	0,021	16,795	1,320	2,049	0,037	10,065	0,028	0,002	0,376	0,269	0,307

MECHANICAL PROPERTIES / CARACTERÍSTICAS MECÁNICAS

TEST Nº / PROBETA	PROBE SITE	PROBE TYPE	Rm N/mm2	Rp 0.2 N/mm2	Rp 1.0 N/mm2	A50 %	A80 %	HRB
01W0KD	C	T	601,10	292,92	326,04	52,90	55,90	78,00
01W0KD	T	T						75,00

REMARKS / OBSERVACIONES

Spectrochemical identity test O.K.
Heat treatment: 1050-1100°C.
Cooling with air.
Issued in agreement with TÜV SÜD Industrie Service GmbH (02/1983).
The delivery is in accordance with the order
Temperatura de hipertemple entre 1050 y 1100 ° C.
NACE-MR0175/ISO 15156-3:2009; NACE MR0103:2012 (Chem & Mech only).
MATERIAL FREE OF RADIACTIVITY

SURFACE AND DIMENSIONAL CONTROL / INSPECCIÓN SUPERFICIAL Y DIMENSIONAL

SATISFACTORY
SATISFACTORIA

WORK INSPECTOR / INSPECTOR

A. Heredia

Palmones, 26 MARZO 2019

FDT0009

This to declare that the material as described in here as been cut to :
COIL 316/L 1500X 2,5 2B Lenght: 1327,000
and remarked with steelgrade, heat n°, workinspector's stamp CC

Seriale Certificato 00000000000000398491 File R:\A0002\00000000000000398491_ART_ICOL_10NA03501000044.TIF

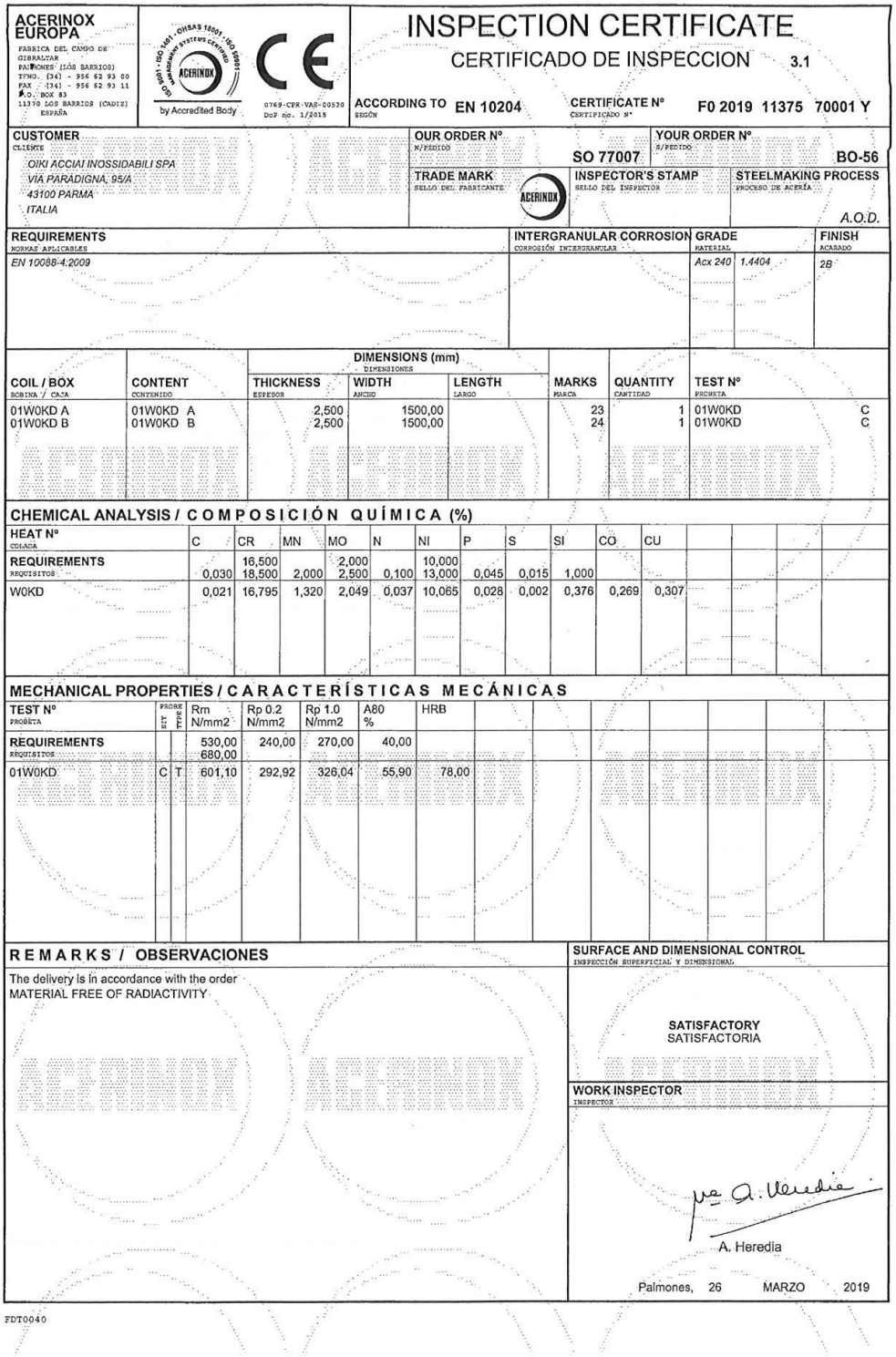

ACERINOX EUROPA
FABRICA DEL CAMPO DE GIBRALTAR
PALMONES (LOS BARRIOS)
TFNO. (34) - 956 62 93 00
FAX (34) - 956 62 93 11
P.O. BOX 83
11370 LOS BARRIOS (CADIZ) ESPAÑA

by Accredited Body
0769-CPR-VAD-00530
DoP no. 1/2015

INSPECTION CERTIFICATE
CERTIFICADO DE INSPECCION 3.1

ACCORDING TO / SEGÚN: EN 10204
CERTIFICATE Nº / CERTIFICADO Nº: F0 2019 11375 70001 Y

CUSTOMER / CLIENTE	OUR ORDER Nº / N/PEDIDO	YOUR ORDER Nº / S/PEDIDO
OIKI ACCIAI INOSSIDABILI SPA VIA PARADIGNA, 95/A 43100 PARMA ITALIA	SO 77007	BO-56

TRADE MARK / SELLO DEL FABRICANTE	INSPECTOR'S STAMP / SELLO DEL INSPECTOR	STEELMAKING PROCESS / PROCESO DE ACERÍA
ACERINOX		A.O.D.

REQUIREMENTS / NORMAS APLICABLES	INTERGRANULAR CORROSION / CORROSIÓN INTERGRANULAR	GRADE / MATERIAL		FINISH / ACABADO
EN 10088-4:2009		Acx 240	1.4404	2B

COIL / BOX / BOBINA / CAJA	CONTENT / CONTENIDO	DIMENSIONS (mm) / DIMENSIONES: THICKNESS / ESPESOR	WIDTH / ANCHO	LENGTH / LARGO	MARKS / MARCA	QUANTITY / CANTIDAD	TEST Nº / PROBETA
01W0KD A	01W0KD A	2,500	1500,00		23	1	01W0KD C
01W0KD B	01W0KD B	2,500	1500,00		24	1	01W0KD C

CHEMICAL ANALYSIS / COMPOSICIÓN QUÍMICA (%)

HEAT Nº / COLADA	C	CR	MN	MO	N	NI	P	S	SI	CO	CU
REQUIREMENTS / REQUISITOS	0,030	16,500 18,500	2,000	2,000 2,500	0,100	10,000 13,000	0,045	0,015	1,000		
W0KD	0,021	16,795	1,320	2,049	0,037	10,065	0,028	0,002	0,376	0,269	0,307

MECHANICAL PROPERTIES / CARACTERÍSTICAS MECÁNICAS

TEST Nº / PROBETA	PROBE SIT.	PROBE TYPE	Rm N/mm2	Rp 0.2 N/mm2	Rp 1.0 N/mm2	A80 %	HRB
REQUIREMENTS / REQUISITOS			530,00 680,00	240,00	270,00	40,00	
01W0KD	C	T	601,10	292,92	326,04	55,90	78,00

REMARKS / OBSERVACIONES

The delivery is in accordance with the order
MATERIAL FREE OF RADIACTIVITY

SURFACE AND DIMENSIONAL CONTROL
INSPECCIÓN SUPERFICIAL Y DIMENSIONAL

SATISFACTORY
SATISFACTORIA

WORK INSPECTOR
INSPECTOR

A. Heredia

Palmones, 26 MARZO 2019

FDT0040

This to declare that the material as described in here as been cut to :
COIL 316/L 1500X 2,5 2B Lenght: 1327,000
and remarked with steelgrade, heat n°, workinspector's stamp CC

COPERCHIO D08.6EG200 ORD.203717/4 QTA.2

outokumpu

INSPECTION CERTIFICATE 3.1
DIN EN 10204 3.1

Certificate No. / Zeugnis Nr. / N° du certificat: 837635/001
Page / Seite / Page: 1(01)
Date / Datum / Date: 03.03.2020

Delivery address, Empfänger, Lieu de livraison:
SIDERMARIOTTI S.R.L.
VIA SAN ROCCO, 12
25026 PONTEVICO
ITALY

SIDERMARIOTTI S.R.L.
VIA SAN ROCCO, 12
25026 PONTEVICO
ITALY

Requirements, Anforderungen, Exigences:
EN 10088-4:2009
AD 2000 W2, W10 & EN 10028-7:2016
ASTM A240/A240M
ASME SA-240/SA-240M II A ED. 2019

Our Order No. / Unser Auftrag Nr. / Notre commande n°: 360018460
Your order, Ihre Bestellung, Votre commande: 005084

Product, Erzeugnisform, Produit: COIL , STAINLESS STEEL

Mark of Manufacturer / Zeichen des Lieferwerkes / Signe de producteur: outokumpu
Process / Erschmelzungsart / Mode de fusion: AOD

Inspector's stamp / Zeichen d. Sachverst. / Poinçon de l'expert

Grade, Werkstoff, Nuance: 1.4404 1.4401 TYPE 316L

Tolerances Toleranzen, Tolérances: EN ISO 9445-2

Marking, Kennzeichnung, Marquage: 1.4404 2B

Marks, Versandzeichen, Marques:

Line / Reihe / Ligne	Item / Position / Poste	Charge-test No. / Schmelze-Probe Nr. / Coulée n°	Size, Abmessungen, Dimensions	Quantity / Stückzahl / Nombre	Weight, Gewicht, Poids	Finish / Ausführung / Fini EN/ASTM
1		3 16694 5	2,0 X 1250 MM		20970 KG	2B

CE
14
0045-CPR-0567

Charge no. / Schmelze Nr. / Coulée n° — Chemical composition, Chemische Zusammensetzung, Composition chimiques

	C %	Si %	Mn %	P %	S %	Cr %	Ni %	MO %	N %
16694	0,018	0,49	0,89	0,035	<.001	17,2	10,0	2,03	0,040

Mechanical properties, Mechanische Eigenschaften, Caracteristiques mecaniques

Line / Reihe / Ligne	Sample ID / Proben ID / Échantillon	Rp0.2 MPa	Rp1.0 MPa	Rm MPa	%	A50 %	A80 %	Hardness / Härte, Durate HBW
1	01	304	335	611		54	53	156
	02	298	329	614		56	55	155

Tensile test, Zugversuch, Essai de traction: ISO 6892-1:2009 A224 SAMPLES PERPENDICULAR TO THE ROLLING DIRECTION

APPROVED ACC.TO AD2000-W0 WITH VERIFICATION OF THE UNIFORMITY OVER THE STRIP LENGTH. CERTIFIED ACC.TO PED 2014/68/EU BY TÜV NORD REG. NO. 0045. DOPS ACC. TO CPR AVAILABLE ON THE WEB PAGE BY STEEL NUMBER

Identity test, Verwechslungsprüfung, Controle d'identification: OK
Sizes, Abmessungen, Dimensions: OK
Surface, Oberfläche, Surface: OK
Test of intergran. corros, Prüfung auf interkrist. Korros, Test de corros. intercrist.
EN ISO 3651-2 A: OK

ASTM A240/A240M
ASME SA-240/SA-240M II A ED. 2019
TYPE 316
EN 10088-2:2014/1.4404, 1.4401
NACE MR0103/ISO 17945 AND
NACE MR0175/ISO 15156-1 / NACE MR0175/ISO 15156-3
HEAT TREATMENT 1070 C

We certify that the above mentioned products comply with the terms of the order contract.
Wir bestätigen, dass die Lieferung den Vereinbarungen der Bestellannahme entspricht.
Nous certifions que les produits énumérés ci-dessus sont conformes aux prescriptions de la commande.

This test certificate is made by controlled ADP-system and is valid without signature.
Dieses Zeugnis wurde von einem überprüften Datenverarbeitungssystem erstellt und ist ohne Unterschrift gültig.
Ce certificat a été établi par un système informatique controlé et est valide sans signature.

Outokumpu Stainless Oy

Authorized inspector / Werkssachverständiger / Inspecteur autorisé: NANNA RIIKKULA

FI-95490 Tornio, Finland
Tel. +358 16 4521,email certificate.tornio@outokumpu.com,
www.outokumpu.com
Domicile: Tornio, Finland. Business Identity Code 0823315-9

TELAIO D08.6EG200 ORD.203717/4 QTA.2

Seriale Certificato 00000000000000433554 File R:\A0002\00000000000000433554_ART_ICOL_10NA03501000044.TIF

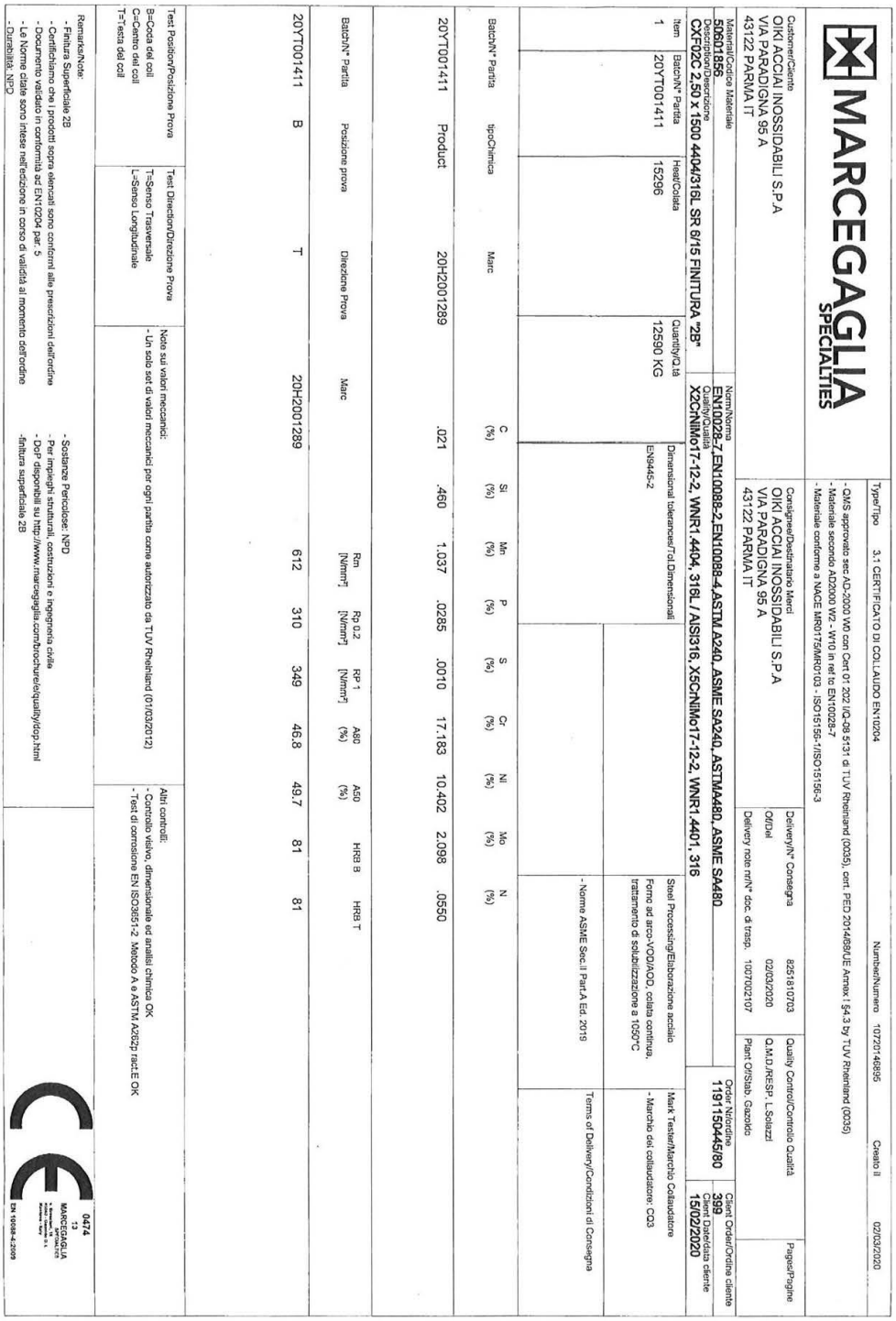

MARCEGAGLIA SPECIALTIES

Type/Tipo 3.1 CERTIFICATO DI COLLAUDO EN10204 Number/Numero 1072014/6895 Creato il 02/03/2020

- QMS approvato sec AD-2000 W0 con Cert 01 202 IQ-08 5131 di TUV Rheinland (0035), cert. PED 2014/68/UE Annex I §4.3 by TUV Rheinland (0035)
- Materiale secondo A2/2000 W2 - W10 in ref to EN10028-7
- Materiale conforme a NACE MR0175/MR0103 - ISO15156-1/ISO15156-3

Customer/Cliente
OIKI ACCIAI INOSSIDABILI S.P.A
VIA PARADIGNA 95 A
43122 PARMA IT

Consignee/Destinatario Merci
OIKI ACCIAI INOSSIDABILI S.P.A
VIA PARADIGNA 95 A
43122 PARMA IT

Delivery/N° Consegna 8251810703
Ord/bel 02/03/2020
Delivery note nr/N° doc. di trasp. 1007/002107

Quality Control/Controllo Qualità
Q.M.D./RESP. L.Solazzi
Plant O/Stab. Gazoldo

Pagina/Pagine

Material/Codice Materiale
50601856
Description/Descrizione
CXF02C 2,50 X 1500 4404/316L SR 6/15 FINITURA "2B"

Norm/Norma
EN10028-7,EN10088-2,EN10088-4,ASTM A240, ASME SA240, ASTM A480, ASME SA480
Quality/Qualità
X2CrNiMo17-12-2, WNR1.4404, 316L / AISI316, X5CrNiMo17-12-2, WNR1.4401, 316

Order Nr/ordine
1191115044580

Client Order/Ordine cliente
399

Date/Data
15/02/2020

Item	Batch/N° Partita	Heat/Colata	Quantity/Q.tà
1	20YT001411	15296	12590 KG

Dimensional tolerances/Tol.Dimensionali
EN9445-2

Steel Processing/Elaborazione acciaio
Forno ad arco-VOD/AOD, colata continua, trattamento di solubilizzazione a 1050°C

Mark Tester/Marchio Collaudatore
- Marchio dei collaudatore: CQ3

- Norme ASME Sec.II Part.A Ed. 2019

Terms of Delivery/Condizioni di Consegna

Batch/N° Partita	tipoChimica	Marc	C (%)	Si (%)	Mn (%)	P (%)	S (%)	Cr (%)	Ni (%)	Mo (%)	N (%)
20YT001411	Product	20H2001289	.021	.460	1.037	.0285	.0010	17.183	10.402	2.098	.0550

Batch/N° Partita	Posizione prova	Direzione Prova	Marc	Rm [N/mm²]	Rp 0.2 [N/mm²]	RP 1 [N/mm²]	A80 (%)	A50 (%)	HRB B	HRB T
20YT001411	B	T	20H2001289	612	310	349	46.8	49.7	81	81

Test Position/Posizione Prova
B=Coda dei coil
C=Centro dei coil
T=Testa dei coil

Test Direction/Direzione Prova
T=Senso Trasversale
L=Senso Longitudinale

Note sui valori meccanici:
- Un solo set di valori meccanici per ogni partita come autorizzato da TUV Rheinland (01/03/2012)

Altri controlli:
- Controllo visivo, dimensionale ed analisi chimica OK
- Test di corrosione EN ISO3651-2, Metodo A e ASTM A262p ract.E OK

Remarks/Note:
- Finitura Superficiale 2B
- Certifichiamo che i prodotti sopra elencati sono conformi alle prescrizioni dell'ordine
- Documento validato in conformità ad' EN10204 par. 5
- Le Norme citate sono intese nell'edizione in corso di validità al momento dell'ordine
- Durabilità: NPD

- Sostanze Pericolose: NPD
- Per impieghi strutturali, costruzioni e ingegneria civile
- DoP disponibili su http://www.marcegaglia.com/brochure/e/quality/dop.html
-finitura superficiale 2B

0474
13
MARCEGAGLIA
EN 10088-4:2009

This to declare that the material as described in here as been cut to :
COIL 316/L 1500X 2,5 2B Lenght: 1270,000
and remarked with steelgrade, heat n°, workinspector's stamp CC