ORION.GROUP LLC
Parnykova str. 1/5, Kriukivshchyna vil.,
Kyivosvyatoshinskiy district, Kyiv region
Ukraine 08136
Phone: +380 44 507 29 94
Fax: +380 44 379 04 58
E-mail: info@oriongr.com

ТОВ ОРІОН.ГРУП
вул. Парникова 1/5, с. Крюківщина
Києво-Святошинський район,
Київська область, Україна 08136
Тел.: +380 44 507 29 94
Факс: +380 44 379 04 58
E-mail: info@oriongr.com

ORION.GROUP

Passport

Dosing tank, 150/190 liters

Serial number №1040
Factory drawing No: ALF1902.1039-1040.00.00.00.000.СБ

2019

Passport Content

1 LIST OF USED STANDARDS AND MARKINGS 3
2 PRODUCT SPECIFICATION 4
2.1 Purpose 4
2.2 Customers' obligations 4
2.3 Technical information 4
3 GENERAL SAFETY RULES 7
3.1 Requirements for attending personnel 7
3.2 Safety instructions 7
3.3 Alarm behavior/ acting in case of emergency 7
4 DESCRIBING OF EQUIPMENT OPERATION 8
5 PACKAGING, SHIPPING, INSTALLATION AND MAINTENANCE INSTRUCTIONS 8
6 INSTRUCTIONS LIST 8
Instruction No. 1 – Transportation, loading/unloading instruction 9
Instruction No. 2 – Packing/unpacking instruction 11
Instruction No. 3 – Equipment storage 12
Instruction No.4 – Upright installing 13
Instruction No.10 – Mounting and commissioning instructions 14
Installation in the design position 14
Process pipelines connection 14
Equipment earthing 15
Electrical connection and earthing of the motor *** 15
Connecting instruments and sensors *** 15
Locks and alarms checking *** 15
Annex 1. Guarantee card 16
Annex 2 Protocol VT 17
Annex 3. Protocol HT 18
Annex 4. Declaration 1935/2004 19
Annex 5. Materials certificates 20

1 LIST OF USED STANDARDS AND MARKINGS

EU directives and harmonized European standards, used in the design and manufacture of capacitive equipment (hereinafter referred to as equipment):

1.1 EN ISO 3834 (part 2)
1.2 EN 1672-2:2005+A1:2009 Food processing machinery – Basic concepts. Part 2: Hygiene requirements
1.3 EN ISO 13445 (part 1-5)

List of used markings and their location

Warning! Danger (other dangers)
Requirements and prohibitions data for injury prevention.

Caution sign! Voltage
Indication of the danger of electric shock with live parts of the equipment or Indication of the danger of electrostatic damage of non-grounded components.

Earth sign
Used to indicate grounding points in electrical products and general-purpose devices

Caution hot surface sign
Used to indicate places where there is a probability of getting burned.

Caution hands in working areas sign
Used to indicate points where there is a chance of injury due to the hands and other parts of the body falling into moving mechanisms.

2 PRODUCT SPECIFICATION

2.1 Purpose

The equipment can be used for product dosing to the process lines.

2.2 Customers' obligations

- ✓ Compliance and performance of all applicable national regulations;
- ✓ Compliance and performance of all standards for safety engineering, accident prevention and environmental protection;
- ✓ Compliance and performance of all admitted professional standards for reliable, technically correct operation;
- ✓ The obligation to ensure the execution of work processes, in particular the use of appropriate personal protective equipment by personnel:
  - o personal protective equipment for washing and disinfecting works (rubberized gloves, glasses, face respirator and other things, which may be recommended by the applicable national regulations and the factory regulations where the equipment is installed;
  - o personal protective equipment for maintenance operations (gloves, glasses, etc., which may be recommended by the applicable national regulations and the factory regulations where the equipment is installed).

  Dispose of harmful to the environment detergents in according to the applicable laws and regulations.

2.3 Technical information

Nb.	Description	Unit value
1	Product to be filled with	Dosing Chemical
2	Product density, kg/m^3	1000
3	Material being in contact with product	EN1.4404
4	Work volume, liters	150
5	Sizes, mm	
	Inside diameter	600
	Max. width	750
	Total height	1136
6	Total volume, liters	190
7	Design temperature, ^{0}C	+0…98
8	Working temperature, ^{0}C	+85
9	Design pressure, bar	0.49+static
10	Working pressure, bar	0.49+static
11	Jacket	-
	Design pressure, bar	-
	Working pressure, bar	-
	Area, m^2	-
12	Type of insulation	-
	Thickness	-

13	Mixer type	-
	Drive power, kW (V)	-
	Voltage, V	-
	RPM	-
14	Estimated weight of equipment without product, kg	51
15	Number of legs	-
16	Climatic service conditions	
	Air temperature, ^{0}C	≤ 35
	Relative humidity, %	≤ 50

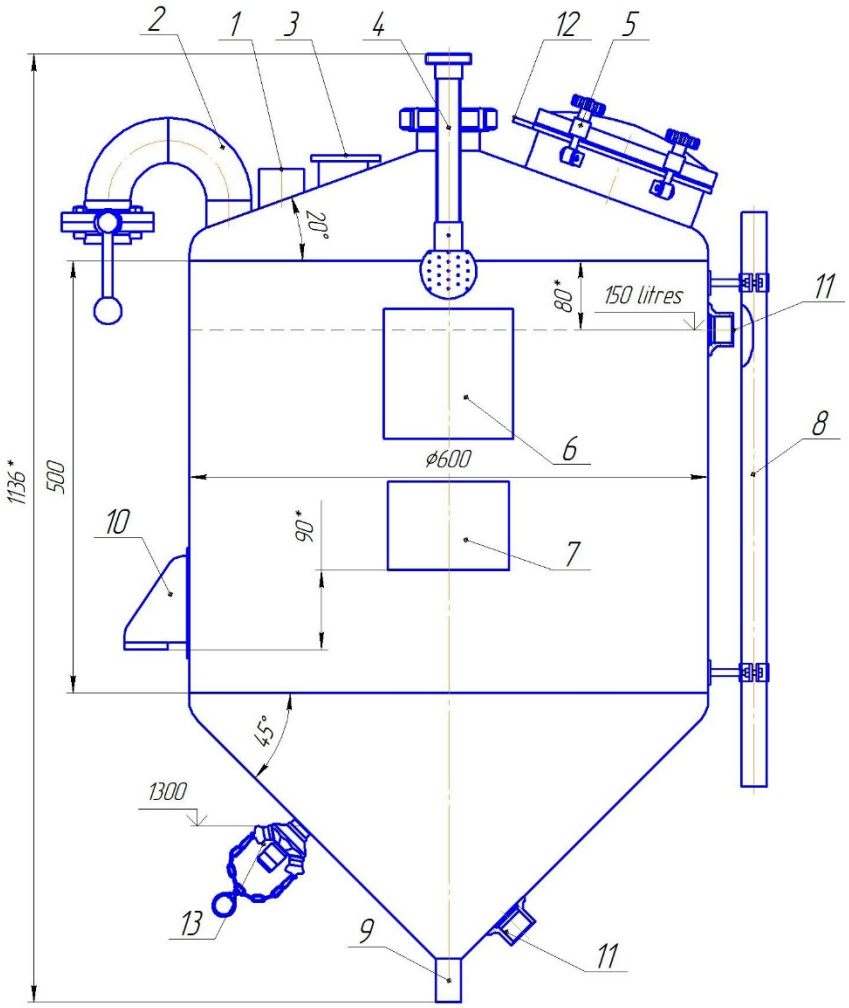
2
1
3
4
12
5
20°
80*
150 litres
11
8
6
ø600
1136*
500
10
90*
7
45°
1300
13
9
11

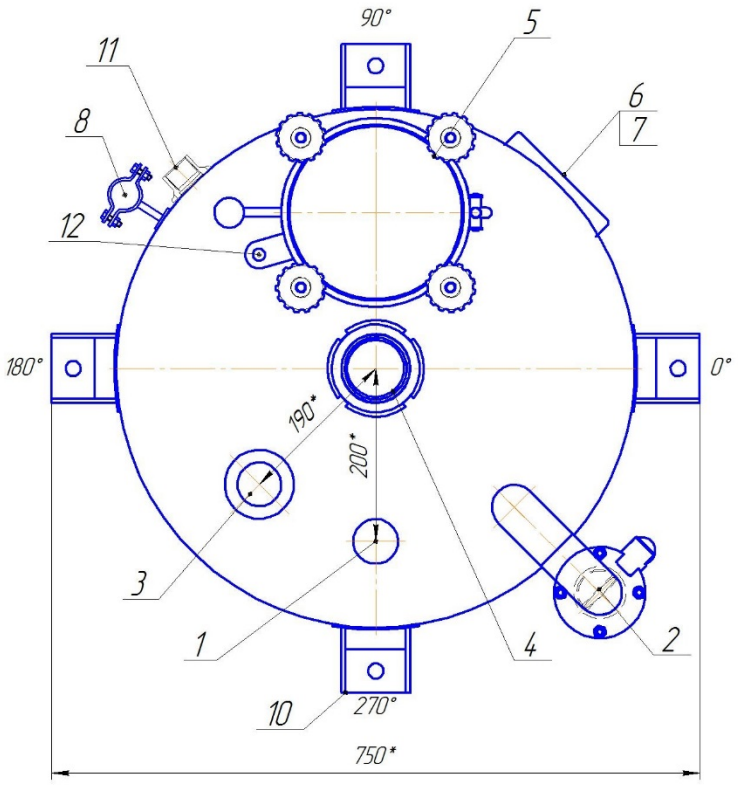
90°
5
11
8
6
7
12
180°
0°
190*
200*
3
1
4
2
10
270°
750*

Nb.	Title	Size	Standard / Supplier
1	Overpressure valve	Ø52x1.5	DN11850/Orion.Group
2	Vent	DN50	DN11850/Orion.Group
3	Clamp ferrule for level measurement	2”	Alfa Laval
4	CIP System (Spray ball LKRK-2F ø64)	DN65/DN25	DN11850/DN11851/ Alfa Laval
5	Inspection hatch D2 Gasket EPDM: Code for order GRCE0200ORD03	DN200	Fratelli Laveggi
6	Manufacturer`s nameplate	200x200x1.5	Orion.Group
7	Alfa Laval`s nameplate (9680123741 AL dram.№74.08.100D)	102x140x1.5	Alfa Laval
8	Cable pipe	ø29x1.5	DN11850/Orion.Group
9	Outlet	ø29x1.5	DN11850
10	Support	-	Orion.Group
11	Adaptor for level switch (E43319 for IFM-LMT100)	G 1/2	Alfa Laval
12	Proximity switch holder	M18	Alfa Laval
13	Keofit Sample Valve (850001/AL item №9680164386)	Ø25	Alfa Laval

3 GENERAL SAFETY RULES

Attending personnel, technical staff must examine the passport and comply with the requirements and recommendations set out in it.

3.1 Requirements for attending personnel

- ✓ Installation, connection, start-up, maintenance and repair should be carried out only by trained, specially instructed, qualified personnel. Instruction must be confirmed in writing;
- ✓ work with electrical equipment should be performed exclusively by an electrician or an authorized person under the supervision of an electrician in accordance with the applicable electrical standards;

  A specialist is one who, based on his professional education, knowledge and experience, as well as knowledge of the relevant provisions, can assess the work assigned to him and determine the existing risks.
- ✓ staff must reach the legal minimum age specified for such activities in the country of use of the equipment.

3.2 Safety instructions

- ✓ use of equipment for purposes other than intended, as well as failure to comply with the requirements and recommendations set forth in the passport can lead to serious consequences regarding health, material damage and equipment failure;
- ✓ Any maintenance, repair, etc. should not be performed from stairs and ladders;
- ✓ Proximity switch on the manway shell to be connected to the automatic system in case using an agitator to protect operators;
- ✓ equipment marking must be clearly visible and readable;
- ✓ untrained and incompetent personnel are not allowed to work and maintain the equipment;
- ✓ when performing repair work:
  - o perform equipment washing after production cycles;
  - o turn off the power that is supplied to the driver, valves and sensors installed on the equipment;
  - o install warning sign on the switch with an appropriate inscription.

3.3 Alarm behavior/ acting in case of emergency

- ✓ turn off the power on the control panel (is not included in the delivery with the equipment, mounted on site by the consumer);

✓ qualified, authorized personnel have to determine and eliminate the cause of the accident.

4 DESCRIBING OF EQUIPMENT OPERATION

The passport contains only recommendations that can be supplemented and modified depending on the technological processes at the factory. During the change of recommendations, follow the requirements of the Directives and Standards described in Clause 1 of the passport.

Equipment filling:

- Fill the equipment using Inlet / Outlet pipe
- Overpressure should be controlled by automation system to protect equipment from the collapse. Keep pressure in the tank in design measuring.

Equipment emptying:

- Emptying the equipment using Inlet / Outlet pipe
- Vacuum should be controlled by automation system to protect equipment from the collapse. Keep pressure in the tank in design measuring.

Equipment clinging:

- Vent valve should be open during cleaning
- Manway should be closed to protect stuff from the chemical solution and hot water which could be used during cleaning
- Use chemical solutions which applied to be used for equipment material (stainless steel)
- Vacuum and overpressure should be controlled by automation system to protect equipment from the collapse. Keep pressure in the tank in design measuring.

5 PACKAGING, SHIPPING, INSTALLATION AND MAINTENANCE INSTRUCTIONS

The packaging, installation and maintenance of equipment, as well as its components, such as: a mixing device (if any), fencing, ladder or transitional bridges (if any), sensors (if any), are allowed to persons familiar with the instructions and passport requirements.

6 INSTRUCTIONS LIST

Title	Instruction No.	Pg.	Appliance.
Transportation, loading /unloading instruction	№1	9	+
Packing/unpacking instruction	№2	11	+
Storage instruction	№3	12	+
Upright installing	№4	13	+
Railing installation	№5		
Ladders installation instruction	№6		
Installation of the service platform between the equipment	№7		
Indicator installation instruction	№8		
Mixer installation instruction	№9		
Mounting and commissioning instruction	№10	14	+
Maintenance instruction	№11		
Emergency instruction	№12		
Safeguard measures instruction	№13		

Instruction No. 1 – Transportation, loading/unloading instruction

The transport position of Dosing tank is carried out on the construction frame together with the other tanks of the dosing system.

The frame is fixed to a wooden pallet and should be keep fixed during any next transportation. The forklift carries out the loading / unloading of the frame.

The equipment is transported only on transport pallets.

For fixing on car platforms use eyebolts, in transport pallet marked with a special sign (see section 1 "Information symbols and inscriptions").

The company - manufacturer is not liable for damage that occurred due to the use of third-party transport cradle, as well as during inappropriate loading / unloading.

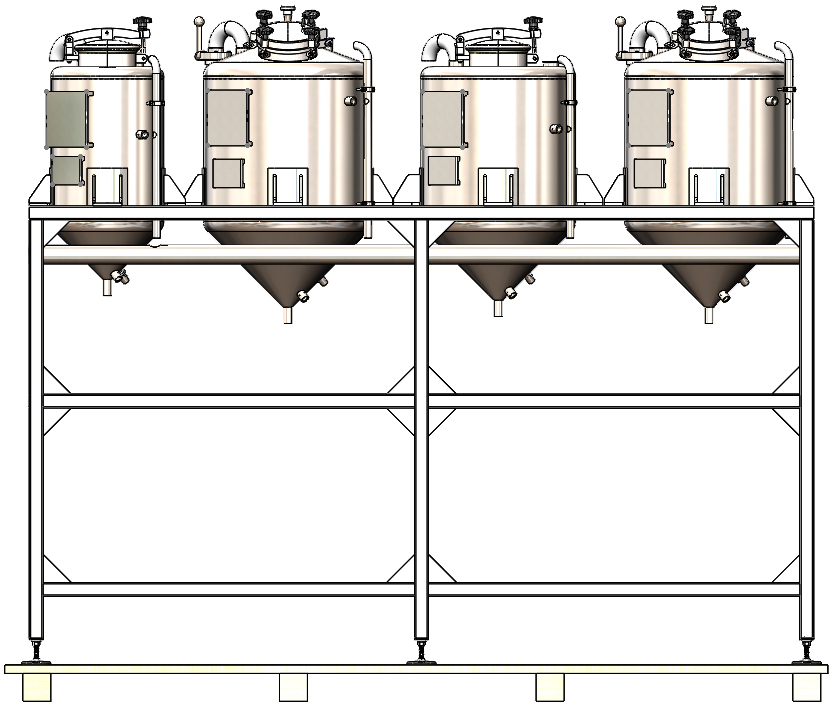

Manufactured and Packed equipment can be transported by vehicles equipped with devices that preclude the movement of goods in compliance with transportation rules for this kind of transport and providing safety from damage.

Avoid contact of stainless steel materials with carbon steel during transportation.

Avoid sudden jolts and bumps when transporting equipment.

During loading / unloading of capacitive and additional equipment, such as stairs, service platforms, etc. (if supplied), use lifting eyes and eyebolts for lifting, indicated in the slinging scheme below.

It is forbidden to load, unload, fix, using for this purpose supply pipes, flanges and other structural elements of equipment that are not intended for such types of work.

Equipment dimensional specifications:

- Length: 2800 mm.
- Width: 750 mm.
- Height: 2490 mm.

Equipment weight:

- Netto: 390 kg.

Recommended Loading / Unloading Facilities:

- Type: Forklift

Instruction No. 2 – Packing/unpacking instruction

The equipment is supplied in protection packaging film that ensures safe transportation.

The consumer is liable for damages that have occurred due to inappropriate organization of unpacking work.

If the facility is equipped with a mixing device, the drive of which is mounted on the top or bottom, then the supporting structures must be dismantled when the equipment is installed vertically in order to protect the shaft from deformation.

Subsequent packaging if required, is performed by third parties. Consumer is responsible for such packaging and for damage that may be done to the equipment during such work.

Upon receipt of the equipment it is necessary:

- Ensure there is no damage that could be done to the equipment during transportation;
- See the inscriptions and markings on the equipment;
- See the accompanying documentation, which is provided along with the cargo (passports, instructions, etc.)

After see the documentation it is necessary:

- Remove the tie bands;
- Remove the protection shrink film which covers the equipment;
- Remove all plugs that close the supply pipes, threads and manhole.

Instruction No. 3 – Equipment storage

Equipment completed with electric drives, sensors, etc. should be stored in closed warehouses or under sheds that protect from water and direct sunlight.

Equipment that is not completed with electrical equipment can be stored in open areas, but this should be protected from direct sunlight.

Consumer is responsible for damages, which occurred due to inappropriate organization of storage of equipment and components.

In the storage area of equipment and components it is prohibited to carry out work that may damage the equipment and its packaging.

It is necessary to periodically check the equipment and packaging condition, if store equipment for more than 3 months.

Instruction No.4 – Upright installing

During loading / unloading of vessels and additional equipment, use lifting lugs and eye bolts (see Instruction No.1 - Transportation, loading / unloading instruction).

It is forbidden to load, unload, fix the equipment, using pipes, flanges and other structural elements not intended for such types of work.

For upright installing, use lifting equipment and slings with a lifting capacity equal to or more than recommended.

Consumer is responsible for damages done to equipment during inappropriate organization of equipment installation work.

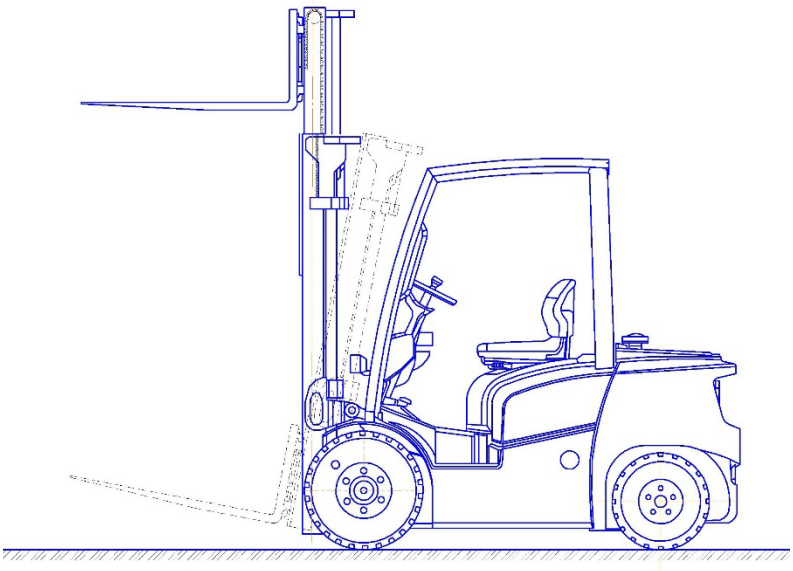

Recommended Loading / Unloading Facilities:

- Type: Forklift
- Lifting power: depends on distance from the loader to the place of mounting

Instruction No.10 – Mounting and commissioning instructions

Pre-starting procedure and commissioning of the equipment includes the following:

- installation in the design position;
- connection of technological pipelines;
- equipment earthing;
- connection of power supply and grounding to the electric engine***;
- connection of indicators and checking their normal operation and accuracy of indications ***;
- checking the level / filling of the liquid in the drive cup ***;
- performance of individual tests of the electric engine at idle and in the articulated state with a mixing device ***;
- interlock and alarms actuation ***;

*** - applied if this equipment is used in the equipment construction

Certified personnel, who got thought the safety instruction and familiarized themselves with factory equipment documentation perform the commissioning.

Installation in the design position

The equipment must be installed in the design position using according to the recommendation shows in the Instruction number 4 - Upright Installing.

Permissible vertical deviation should be not more than 3^0. Verticality should be ensured by means of support adjustment. After adjustment, lock in using the lock-nut (1).

Process pipelines connection

Connect the pipelines using arc welding with a non-consumable electrode in inert protective gas. All works must be performed in accordance with Standards and Directives, listed in chapter 1.

Welding of pipelines to the taps and fittings tanks carried out in accordance with the technology developed by the installation company, providing the necessary requirements for cleanliness, avoiding the presence of construction dust and abrasive particles, foreign objects, etc, in the internal cavity.

Connect the flanges, clamps and other connections provided by the design of the equipment to the facility. Check the tightness of connections.

Equipment warranty will be removed in case of unauthorized changes in equipment design

Equipment earthing

Frame with the tank should be earthed during installation on site. Position of the earthing cable should be selected on side taking into account subsequent ease of maintenance.
Cables should be crimped with lugs that match the cable cross section and the diameter of the grounding bolt on the equipment case. Recommended section - 8mm. Connect the ground cable to the appropriate hardware mount. Equipment earthing is mandatory.

The equipment warranty will be removed if the equipment is not properly earthed.

Electrical connection and earthing of the motor ***

In the case of the presence of an electric motor (s) in the construction of the equipment, make the power connection and grounding, guided by the drive passport (delivered together with Passport for equipment).

Passport is also available on the cloud. You can get access to it, using QR-code on the equipment nameplate.

Connecting instruments and sensors ***

In the case of the presence of instrument (s) and sensor (s) in the construction of the equipment, make the power connection and grounding, guided by the drive passport (delivered together with Passport for equipment).

Passport is also available on the cloud. You can get access to it, using QR-code on the equipment nameplate.

Locks and alarms checking ***

It is obligatory to check the interlocks and alarms during commissioning, for example, to turn off the mixing device when the hatch is open and to send an error signal to the operator.

Annex 1. Guarantee card

You have chosen a stainless steel equipment, made by Orion.Group LLC, Ukraine. This warranty card contains information on the conditions for granting a warranty on the dosing tank 150/190 liters. Detailed information and guidance on installation and maintenance are included in this Passport.

QUALITY ASSURANCE

We guarantee that the stainless steel **Dosing tank, 150/190 liters**, serial number **1040** was tested and qualified.

06.2019

Controlled by: _____ A. Tarasenko

GUARANTEE CONDITIONS

Guarantee period is 24 months from production date.

The guarantee is cover repairs of all factory defects, which can appear during guarantee time.

The guarantee is not related with damages caused by failure to follow recommendations presented in this passport such as: incorrect transportation, loading/unloading, transportation, installation, etc.

Annex 2 Protocol VT

ПРОТОКОЛ № VT ALF1902
PROTOCOL № VT ALF1902

Визуально-оптический контроль сварных швов Dosing tank, 150/190 liters
Visual test of welding seams on Dosing tank, 150/190 liters

№886

Адрес объекта контроля (Address of the control object):
ул. Парниковая 1/5, с. Крюковщина Киевосвятошинский р-н, Киевская область
Parnykova str. 1/5, Kriukivshchyna vil., Kyivosvyatoshinskiy district, Kyiv region

Дата проведения контроля (Date of control):
06.2019

Цель контроля (purpose of control):
Оценка качества сварных соединений ***Dosing tank, 150/190 liters №1040***
Evaluation of the welding seams quality ***Dosing tank, 150/190 liters №1040***

Оборудование (equipment):
Люксметр №1128, лупа (x3), штангенциркуль (0÷122мм), линейка (0÷300 мм), универсальный шаблон сварщика.
Lux meter №1128, magnifier (x3), caliper (0 ÷ 122mm), ruler (0 ÷ 300 mm), universal welder template

Визуально-оптический контроль проводился согласно (visual test was carried out according to):
Проектно рабочей документации – чертеж *ALF1902.1039-1040.00.00.00.000СБ*
EN ISO 17637 «Контроль неразрушающий. Визуальный контроль соединений, выполненных сваркой плавлением»
Дефекты EN ISO 5817 «Сварные соединения из стали, никеля, титана и их сплавов, полученные сваркой плавлением (исключая лучевые способы сварки)».

Project working documentation - drawing *ALF1902.1039-1040.00.00.00.000СБ*
EN ISO 17637 "Non-destructive testing. Visual inspection of the welding seams".
Defects EN ISO 5817 "Welding seams made of steel, nickel, titanium and their alloys, obtained by welding by melting (excluding ray welding methods)."

РЕЗУЛЬТАТЫ КОНТРОЛЯ (Results):

В результате работ по проведению визуально-оптического контроля сварных швов ***Dosing tank, 150/190 liters №1040***, недопустимых дефектов не выявлено. Размеры швов удовлетворяют условия нормативной и проектной документации.

As a result of work on visual inspection of welding seams ***Dosing tank, 150/190 liters №1040****, unacceptable defects were not detected. Dimensions of welding seams are satisfy the conditions of normative and design documentation.*

Контроль провели (Controlled by):
Специалист II уровня (Specialist II Level)
VT (№11265.VT.2/18) _____ A. Tarasenko

Annex 3. Protocol HT

Controlled equipment: Dosing tank, 150/190 liters

ACT № 512

About the hydraulic test

« 13 » June 2019 г.

Hydraulic test *ALF1902.1039-1040.00.00.00.000 СБ*

(reg. № 512; plant. №.1040) of steel 1.4404

Test of tank:

Main dimensions: diameter – Ø600 mm, Height of cylindrical part –500 mm, volume – 150 l .

0.49 bar	6 h	+20C°	not revealed
(Pressure value)	(Holding time)	(air temperature)	(pressure drop over time)

Revealed: **Not detected**

(Signs of residual deformations, cracks, ruptures, leaks, sweating in welded joints, in the main metal, in plug-in connections)

Resolved: **Withstood the test**

(withstand (Could not stand) tests)

Tests conducted:

Mazurenko V		13.06.19
(FULL NAME. Working)	(signature)	(date)
Onashko V.		13.06.19
(FULL NAME. Workshop master)	(signature)	(date)
Ivasiuk S.		13.06.19
(FULL NAME. Engineer-designer)	(signature)	(date)

Annex 4. Declaration 1935/2004

ORION.GROUP LLC
Parnykova str. 1/5, Kriukivshchyna vil.,
Kyivosvyatoshinskiy district, Kyiv region
Ukraine 08136
Phone: +380 44 507 29 94
Fax: +380 44 379 04 58
E-mail: info@oriongr.com

ORION.GROUP

ТОВ ОРІОН.ГРУП
вул. Парникова 1/5, с. Крюківщина
Києво-Святошинський район,
Київська область, Україна 08136
Тел.: +380 44 507 29 94
Факс: +380 44 379 04 58
E-mail: info@oriongr.com

MANUFACTURER DECLARATION ON FOOD COMPLIANCE

We, at ORION.GROUP LLC., are aware of the regulations inside the European Union, and are committed to the decisions of the European Parliament for protecting safety, human health and our environment. We acknowledge the importance of selecting the right materials especially for sensors that occasionally or regularly come into contact with food.

In accordance with the requirements of the (EC) Regulations No. 1935/2004 and 2023/2006 we restrict ourselves by purchasing raw materials intended to be used for parts that may come into contact with food exclusively from recognized suppliers and always together with an appropriate material certificate. We also understand the importance of traceability of components and sub-assemblies throughout our manufacturing process. This traceability concept is defined and regularly certified in our quality management system according to ISO 9001.

Therefore, we as a manufacturer declare that the parts of vessels with serial numbers 1039, 1040, 1041, 1042, 1043 intended for contact with food made from stainless steel of grade 1.4404 (AISI 316L, X2CrNiMo17-12-2) and 1.4301 (AISI 304, X5CrNi18 10) or fluoropolymer plastics of type PTFE, PFA or FEP completely fulfill the requirements of the Regulation No. 1935/2004 and hence may be used in processes where the items come into direct contact with food.

We would like to emphasize, however, that after installation the operator must ensure the hygienic requirements and proper cleaning of the food contacted parts.

Kriukivshchyna vil. (Ukraine), June 3rd, 2019.

Production Director

Roman Tkachenko

Україна • Товариство з обмеженою відповідальністю • м. Київ • «ОРІОН.ГРУП» ідентифікаційний код 23495725

Annex 5. Materials certificates

Seriale Certificato 00000000000000364080 File R:\A0002\00000000000000364080_ART_ICOL_10NA03501000045.TIF

aperam

Correspondenticadres:
Aperam Genk
Swinnenwijerweg 5, Poort Genk 7523
3600 Genk, Belgium
Tel. +32 (0)89 30 21 11
A01

MILL CERTIFICATE BS EN 10204/3.1
CERTIFICAT DE RECEPTION NF EN 10204/3.1
ABNAHMEPRUEFZEUGNIS DIN EN 10204/3.1
A02

N-Nr-N 18K0043162-01 V01 A03

Certified acc.PED 2014/68/EU Annex I § 4.3 by Certification Body 0036 of TUV SUD Industrie Service GmbH with cert.No.:314/2007/MUC.Renounced of counter signature agreed byTÜV SÜD (9/5/2007).Approved acc.AD 2000-Merkblatt W0/TRD 100 by TÜV SÜD Industrie Service GmbH.Confirmation letter from TÜVSÜD Industrie Service GmbH of 07/05/2010 about the uniformity of coils acc.AD2000 W2 §4.1.1

Tech.Req.:AD 2000 W2 -- AD 2000 W10 -- EN 13445-2 Z05

Manufacturer's works order number
N° de la commande usine productrice
Werksauftragsnummer
80459979/14-20076/322/14 A08

Surveyor's mark
Cachet de l'expert
Stempel des Werkssachverstaendigen
GNKI Z03

Purchaser and/or consignee
Client et/ou destinataire
Besteller und/oder Empfaenger
OIKI ACCIAI INOSSIDABILI SPA
VIA PARADIGNA 95/A
43100 PARMA
ITALIE A06

Purchaser's order number
N° de commande client
Kundenbestellnummer
ord 343 ottobre 2018 A07

Product - Produit - Erzeugnis
COIL, COLD ROLLED, FINISH 2 B
COIL, LAMINE A FROID, FINI 2 B
COIL,KALTGEWALZT,GEGLUEHT+GEBEIZT,LEICHT NACHGEWALZT B01

Customer article number
N.article client
Artikelnummer des Kunden A09

Steel designation B02
Désignation de l'acier
Stahlbezeichnung

	Finish Présentation Ausfuehrung
EN 10028-7-2016 1.4404 / 1.4401	2B
EN 10088-2-2014 1.4404 / 1.4401	2B
ASTM A 240-2017 TYPE 316L / 316	2B
ASME SA 240-2017 TYPE 316L / 316	2B
EN 10088-4-2009 1.4404 / 1.4401	2B

Steelmaking process C70
Mode d'élaboration de l'acier - Stahlherstellungverfahren
Prod.proces: Electric arc furnace - VOD/AOD - Continuous casting
Proc.fabric.: Four à arc - VOD/AOD - Coulée continue
Fertigungsablauf: Elektro-Ofen - VOD/AOD - Stranggussanlage

Any supplementary requirements B03
Prescriptions supplémentaires - Zusätzliche Anforderungen
OIKI LAF 2017

Product delivery condition
Etat de livraison du produit - Lieferzustand
Solution treated:
Hypertrempe: 1050 °C
Loesungsgegl+abgeschreckt:
Forced air-water/air forcé-eau
Geblaese Luft-Wasser B04

ASTM A480 / A480M -- ASME CODE SECT.2 PT.A -- MAT MERCURY FREE// NACE MR 0175 / ISO 15156-1 / ISO 15156-3 -- NACE MR 0103 // CORR. TEST: ASTM A262-E: OK // CORROSION INTERGRANULAIRE SELON ISO 3651/2:OK Z06

Identification of the product B07
Identification du produit - Identifizierung des Erzeugnisses
MELTED IN BELGIUM, MADE IN BELGIUM

Coil n.
N.Bobine - Band Nr.
83508634

Heat n.
N.Coulée - Schmelz Nr.
835086

Dimensions
Dimensions - Abmessungen

Thickness B09	Width B10	Length B11
Epaisseur - Staerke	Largeur - Breite	Longueur - Laenge
2.50 mm	2000.00 mm	

Number of pieces B05
Nb de pièces - Stueckzahl: 1

Net weight B13
Poids net - netto Gewicht: 27470 KG

CHEMICAL ANALYSIS - ANALYSE CHIMIQUE - CHEMISCHE ZUSAMMENSETZUNG

	C	Si	Mn	Ni	Cr	Mo	Ti	N	S	P	Cu	Co				
Required -Exigé %mini Anforderung. %maxi	0.030	0.75	2.00	10.00 13.00	16.50 18.00	2.00 2.50		0.100	0.015	0.045						
Cast Analysis Analyse coulee Analyse Schmelze	0.023 C71	0.50 C72	1.24 C73	10.02 C74	16.55 C75	2.06 C76	C77	0.041 C78	0.003 C79	0.039 C80	0.35 C81	0.237 C82	C83	C84	C85	C86

Positive material identification carried out : OK
Tests de vérification de la conformité de la nuance fournie : OK
Verwechslungpruefung wurde durchgefuehrt : OK C04 C93 D52

Location (1)
Direction (2)

MECHANICAL PROPERTIES - PROPRIETES MECANIQUES - MECHANISCHE WERTE EN ISO 6892-1 B / A-SA 370 C20
Room temperature - Température ambiante - Raumtemperatur
Test temperature (°C) : C03

	Direction (2)		Yield or proof strength Limite d'élasticité Dehngrenze MPa		Tensile Strength Résistance à la traction Zugfestigkeit MPa	Elongation after fracture Allongement après rupt. Bruchdehnung %		Hardness Dureté Haerte	Yield or proof strength Limite d'élasticité Dehngrenze MPa		Tensile str. Résist. MPa Zugfestigkeit	Elongation % Allongement. Bruchdehnung
		Required Exigé Anforderung	Rp0.2%	Rp1%	Rm	50mm	80mm	HRBW	Rp0.2%	Rp1%	Rm	50mm
		mini	240	270	530	40	40	95				
		maxi			680							
1	T	Obtained Obtenu Ergebnisse	310 C11	334 C14	639 C12	51 C13	48 C15	83 84 C31	C16	C17	C18	C19
2												

Impact strength test
Essai de résilience
Kerbschlagzaehigkeitstest
C40 | f(%) | C44 | C42

Corrosion test
Test de corrosion
Korrosionstest
EN ISO 3651/2 - A:OK D51

E0.2(T)/R(T) %
48 C50 | C51 | C52 | C53 | C54 | C55 | C05

Internal cleanliness: A: B: C: D: C57

Location of the sample (1)
Emplacement de l'échantillon
Lage des Probenabschnittes
1. Front - Début - Anfang
2. Back - Fin - Ende
3. Middle - Milieu - Mitte C01

Direction of the test pieces (2)
Orientation des éprouvettes
Probenrichtung
T. Transverse - Travers - Quer
L. Longitudinal - Long - Laengs C02

The delivery is in accordance with the order
La fourniture est conforme aux exigences de la commande
Die lieferung entspricht den Bestellbedingungen Z01

Packing list
Avis d'expédition **2018050402-20076**
LieferscheinNummer A10

Marking, inspection and measurement : without objection
Contrôle de marquage, d'aspect et de dimensions : satisfaisants
Pruefung der Stempelung, des Oberflaechenaspekts und der Abmessungen : ohne Beanstandung D01

Organisation inspection
Organisme et/ou service contrôle
Ueberwachungsabteilung A05

Quality Department
27/9/2018
The inspector
Le responsable
Der Werkssachverstaendige
D. Raemaekers Z02

ZSQ701 - PS5

This to declare that the material as described in here as been cut to :
LAM.316L 4000X2000X2,5 2B Lenght: 4000,000
and remarked with steelgrade, heat n°, workinspector's stamp CC

Seriale Certificato 00000000000000364081 File R:\A0002\00000000000000364081_ART_ICOL_10NA03501000045.TIF

A04

aperam

Correspondentieadres:
Aperam Genk
Swinnenwijerweg 5, Poort Genk 7523
3600 Genk, Belgium
Tel. +32 (0)89 30 21 11

A01

MILL CERTIFICATE BS EN 10204/3.1
CERTIFICAT DE RECEPTION NF EN 10204/3.1
ABNAHMEPRUEFZEUGNIS DIN EN 10204/3.1

A02

Factory Production Control certified by TUV SUD Industrie Service Gmbh
with certificate nr 0036-CPR-M-043-2011.
In compliance with the Construction Product Regulation Nr 305/2011/EU.

Z05

N-Nr-N 18K0043162-CE V01 A03

Manufacturer's works order number
N° de la commande usine productrice
Werksauftragsnummer
80459979/14-20076/322/14 A08

Surveyor's mark
Cachet de l'expert
Stempel des
Werkssachverstaendigen
GNK1 Z03

Purchaser und/or consignee
Client et/ou destinataire
Besteller und/oder Empfaenger
OIKI ACCIAI INOSSIDABILI SPA
VIA PARADIGNA 95/A

43100 PARMA
ITALIE

A06

Purchaser's order number
N° de commande client
Kundenbestellnummer
ord 343 ottobre 2018 A07

Product - Produit - Erzeugnis
COIL, COLD ROLLED, FINISH 2 B
COIL, LAMINE A FROID, FINI 2 B
COIL,KALTGEWALZT,GEGLUEHT+GEBEIZT,LEICHT NACHGEWALZT
B01

Customer article number
N.article client
Artikelnummer des Kunden
A09

Steel designation B02
Désignation de l'acier
Stahlbezeichnung
EN 10088-4-2009 1.4404/1.4401

Finish
Présentation
Ausfuehrung
2B

Steelmaking process C70
Mode d'élaboration de l'acier - Stahlherstellungverfahren
Prod.proces: Electric arc furnace - VOD/AOD - Continuous casting
Proc.fabric.: Four à arc - VOD/AOD - Coulée continue
Fertigungsablauf: Elektro-Ofen - VOD/AOD - Stranggussanlage

Any supplementary requirements B03
Prescriptions supplémentaires - Zusätzliche Anforderungen
OIKI LAF 2017

Product delivery condition
Etat de livraison du produit - Lieferzustand

Solution treated:
Hypertrempe: **1050 °C**
Loesungsgegl+abgeschreckt:

Forced air-water/air forcé-eau
Geblaese Luft-Wasser B04

Z06

Identification of the product B07
Identification du produit - Identifizierung des Erzeugnisses
MELTED IN BELGIUM, MADE IN BELGIUM

Dimensions
Dimensions - Abmessungen

Thickness B09
Epaisseur - Staerke
2.50 mm

Width B10
Largeur - Breite
2000.00 mm

Length B11
Longueur - Laenge

Number of pieces B08
Nb de pièces - Stueckzahl
1

Coil n. / N.Bobine - Band Nr.
83508634

Heat n. / N.Coulée - Schmelz Nr.
835086

Net weight B13
Poids net - netto Gewicht
27470 KG

CHEMICAL ANALYSIS - ANALYSE CHIMIQUE - CHEMISCHE ZUSAMMENSETZUNG

	C	Si	Mn	Ni	Cr	Mo	Ti	N	S	P	Cu	Co				
Required - Exigé %mini / Anforderung %maxi	0.030	0.75	2.00	10.00 / 13.00	16.50 / 18.00	2.00 / 2.50		0.100	0.015	0.045						
Cast Analysis / Analyse coulee / Analyse Schmelze	0.023 C71	0.50 C72	1.24 C73	10.02 C74	16.55 C75	2.06 C76	C77	0.041 C78	0.003 C79	0.039 C80	0.35 C81	0.237 C82	C83	C84	C85	C86

Positive material identification carried out : OK
Tests de vérification de la conformité de la nuance fournie : OK
Verwechslungpruefung wurde durchgefuehrt : OK
C04 C93 D52

Location (1)

MECHANICAL PROPERTIES - PROPRIETES MECANIQUES - MECHANISCHE WERTE EN ISO 6892-1 B / A-SA 370 C20

Room temperature - Température ambiante - Raumtemperatur
Test temperature (°C) : C03

	Direction (2)	Required Exigé Anforderung	Yield or proof strength Limite d'élasticité Dehngrenze MPa Rp0.2%	Rp1%	Tensile Strength Résistance à la traction Zugfestigkeit MPa Rm	Elongation after fracture Allongement après rupt. Bruchdehnung % 50mm	80mm	Hardness Dureté Haerte HRBW	Yield or proof strength Limite d'élasticité Dehngrenze MPa Rp0.2%	Rp1%	Tensile str. Résist. MPa Zugfestigkeit Rm	Elongation % Allongement. Bruchdehnung 50mm
		mini	240	270	530	40	40					
		maxi			680			95				
1	T	Obtained Obtenu Ergebnisse	310 C11	334 C14	639 C12	51 C13	48 C15	83	C16	C17	C18	C19
2								84 C31				

Impact strength test Essai de résilience Kerbschlagzaehigkeitstest	Corrosion test Test de corrosion Korrosionstest	E0.2(T)/R(T) %						
C40 t(°c) C44 / C42	EN ISO 3651/2 - A:OK D51	48 C50	C51	C52	C53	C54	C55	C05

Internal cleanliness: A: B: C: D: C57

Location of the sample (1)
Emplacement de l'échantillon
Lage des Probenabschnittes
1. Front - Début - Anfang
2. Back - Fin - Ende
3. Middle - Milieu - Mitte
C01

Direction of the test pieces (2)
Orientation des éprouvettes
Probenrichtung
T. Transverse - Travers - Quer
L. Longitudinal - Long - Laengs
C02

The delivery is in accordance with the order
La fourniture est conforme aux exigences de la commande
Die lieferung entspricht den Bestellbedingungen Z01

Packing list
Avis d'expédition **2018050402-20076**
LieferscheinNummer A10

Marking, inspection and measurement : without objection
Contrôle de marquage, d'aspect et de dimensions : satisfaisants
Pruefung der Stempelung, des Oberflaechenaspekts und der
Abmessungen : ohne Beanstandung
D01

Organisation inspection
Organisme et/ou service contrôle
Ueberwachungsabteilung A05

Quality Department

27/9/2018

The Inspector
Le responsable
Der Werkssachverstaendige **D. Raemaekers** Z02

ZSQ701 - PS5

This to declare that the material as described in here as been cut to :
LAM.316L 4000X2000X2,5 2B Lenght: 4000,000
and remarked with steelgrade, heat n°, workinspector's stamp CC

Seriale Certificato 00000000000000364083 File R:\A0002\00000000000000364083_ART_ICOL_10NA03501000045.TIF

aperam

Correspondance address
Adresse de correspondance - Adresse für briefwechsel

Swinnenwijerweg 5, Poort Genk 7523
3600 Genk, Belgium CE01

Annex to certificate 18K0043162-01 V01
Annexe du CCPU
Anlage Zum Zeugnis CE02

Certificate
CCPU - Zeugnis
18K0043162-CE V01 CE05

Certificate of Production Control Number
Numéro du certificat de contrôle de la production
Zeugnisnummer von Produktionskontrolle
0036-CPD-43-2011 CE03

Year 11
Année
Jahr CE04

CE 0036 CE06

Manufacturer's works order number
N° de la commande usine productrice
Werksauftragsnummer
80459979/14-20076/322/14 CE07

Purchaser and/or consignee
Client et/ou destinataire
Besteller und/oder Empfaenger
OIKI ACCIAI INOSSIDABILI SPA
VIA PARADIGNA 95/A
43100 PARMA
ITALIE CE08

Purchaser's order number
N° de commande client
Kundenbestellnummer
ord 343 ottobre 2018 CE09

Customer article number
N° d'article client
Artikelnummer des Kundes CE10

Identification of the product
Identification du produit - Identifizierung des Erzeugnisses

Dimensions
Dimensions - Abmessungen

Coil n°	Thickness	Width	Length
N° de bobine - Band Nr	Epaisseur - Dicke	Largeur - Breite	Longueur - Laenge
83508634 CE11	2.50 mm CE12	2000.00 mm CE13	CE14

Stainless steel / Acier inoxydable / Rostfreier Stahl CE15

EN10088-4 CE16

Intended uses : building constructions or civil engineering
Usages prévus : construction immobilière ou génie civil
Vorgesehene Verwendungen : Hochbauten und Ingenieurbauwerke CE17

Declaration of performance :
Déclaration des performances : DOP.Nr.GNK.08.01/GNK.10.01
Leistungserklärung :
DoP available on website Aperam : www.aperam.com/europe/news-publications/documentation/certifications/approvals CE18

Steel
Acier 1.4404/1.4401
Werkstoff CE19

Cold rolled
Laminé à froid
Kaltgewalzt CE20

Coil / bobine / Band CE21

Elongation / Allongement / Bruchdehnung
Tensile strength / Résistance à la traction / Zugfestigkeit
Yield strength / Limite d'élasticité / Dehngrenze
Impact strength / Résistance au choc / Kerbschlagzähigkeit
Weldability / Aptitude au soudage / Schweisseignung
Durability / Durabilité / Dauerhaftigkeit
Characteristics expressed as indicated in the above mentioned DOP
Tolerances on dimension and shape / Tolérances sur les dimensions et sur forme / Grenzabmasse unf Formtoleranzen : EN ISO 9445 CE22

Regulated substance : no performance determined
Substance régiementée : aucune performance déterminée
Regulierter Stoff: keine Leistung festgestellt CE23

This to declare that the material as described in here as been cut to :
LAM.316L 4000X2000X2,5 2B Lenght: 4000,000
and remarked with steelgrade, heat n°, workinspector's stamp CC

Seriale Certificato 00000000000000393930 File R:\A0002\00000000000000393930_ART_ICOL_10NA03501000044.TIF

A04

aperam

Correspondenticadres:
Aperam Genk
Swinnenwijerweg 5, Poort Genk 7523
3600 Genk, Belgium
Tel. +32 (0)89 30 21 11

A01

MILL CERTIFICATE BS EN 10204/3.1
CERTIFICAT DE RECEPTION NF EN 10204/3.1
ABNAHMEPRUEFZEUGNIS DIN EN 10204/3.1

A02

Factory Production Control certified by TUV SUD Industrie Service Gmbh
with certificate nr 0036-CPR-M-043-2011.
In compliance with the Construction Product Regulation Nr 305/2011/EU.

Z05

N-Nr-N 19K0014745-CE V01 A03

Manufacturer's works order number
N° de la commande usine productrice
Werksauftragsnummer
80485937/02-20076/010/02 A08

Surveyor's mark
Cachet de l'expert
Stempel des
Werkssachverstaendigen
GNK1 Z03

Purchaser and/or consignee
Client et/ou destinataire
Besteller und/oder Empfaenger
OIKI ACCIAI INOSSIDABILI SPA
VIA PARADIGNA 95/A
43100 PARMA
ITALIE A06

Purchaser's order number
N° de commande client
Kundenbestellnummer
ORD. 29- MARZO A07

Product - Produit - Erzeugnis
COIL, COLD ROLLED, FINISH 2 B
COIL, LAMINE A FROID, FINI 2 B
COIL,KALTGEWALZT,GEGLUEHT+GEBEIZT,LEICHT NACHGEWALZT
B01

Customer article number
N.article client
Artikelnummer des Kunden
10NA03501000055 A09

Steel designation B02
Désignation de l'acier
Stahlbezeichnung
EN 10088-4-2009 1.4404/1.4401

Finish
Présentation
Ausfuehrung
2B

Steelmaking process C70
Mode d'élaboration de l'acier - Stahlherstellungverfahren
Prod.proces: Electric arc furnace - VOD/AOD - Continuous casting
Proc.fabric.: Four à arc - VOD/AOD - Coulée continue
Fertigungsablauf: Elektro-Ofen - VOD/AOD - Stranggussanlage

Any supplementary requirements B03
Prescriptions supplémentaires - Zusätzliche Anforderungen
OIKI LAF 2017

Product delivery condition
Etat de livraison du produit - Lieferzustand
Solution treated:
Hypertrempe: **1050 °C**
Loesungsgegl+abgeschreckt:
Forced air-water/air forcé-eau
Gebiesse Luft-Wasser B04

Z06

Identification of the product B07
Identification du produit - Identifizierung des Erzeugnisses
MELTED IN BELGIUM, MADE IN BELGIUM

Dimensions
Dimensions - Abmessungen

Thickness B09	Width B10	Length B11
Epaisseur - Staerke	Largeur - Breite	Longueur - Laenge
2.50 mm	1500.00 mm	

Number of pieces B08
Nb de pièces - Stueckzahl: 1

Net weight B13
Poids net - netto Gewicht: 19980 KG

Coil n.	Heat n.
N.Bobine - Band Nr.	N.Coulée - Schmelz Nr.
90710826	907108

CHEMICAL ANALYSIS - ANALYSE CHIMIQUE - CHEMISCHE ZUSAMMENSETZUNG

	C	Si	Mn	Ni	Cr	Mo	Ti	N	S	P	Cu	Co				
Required -Exigé %mini Anforderung. %maxi	0.030	0.75	2.00	10.00 13.00	16.50 18.00	2.00 2.50		0.100	0.015	0.045						
Cast Analysis Analyse coulee Analyse Schmelze	0.026 C71	0.52 C72	1.32 C73	10.05 C74	16.58 C75	2.03 C76	C77	0.032 C78	0.005 C79	0.039 C80	0.36 C81	0.248 C82	C83	C84	C85	C86

D52

Positive material identification carried out : OK
Tests de vérification de la conformité de la nuance fournie : OK
Verwechslungpruefung wurde durchgefuehrt : OK
C04 C93

MECHANICAL PROPERTIES - PROPRIETES MECANIQUES - MECHANISCHE WERTE EN ISO 6892-1 B / A-SA 370 C20

Room temperature - Température ambiante - Raumtemperatur | Test temperature (°C) : C03

Location (1)	Direction (2)		Yield or proof strength Limite d'élasticité Dehngrenze MPa		Tensile Strength Résistance à la traction Zugfestigkeit MPa	Elongation after fracture Allongement après rupt. Bruchdehnung %		Hardness Dureté Haerte	Yield or proof strength Limite d'élasticité Dehngrenze MPa		Tensile str. Résist. MPa Zugfestigkeit	Elongation % Allongement Bruchdehnung
		Required Exigé Anforderung	Rp0.2%	Rp1%	Rm	50mm	80mm	HRBW	Rp0.2%	Rp1%	Rm	50mm
		mini	240	270	530	40	40					
		maxi			680			95				
1	T	Obtained Obtenu Ergebnisse	302	330	624	50	47	82				
2			C11	C14	C12	C13	C15	83 C31	C16	C17	C18	C19

Impact strength test Essai de résilience Kerbschlagzaehigkeitstest			Corrosion test Test de corrosion Korrosionstest	B0.2(T)/R(T) %						
C40	t(°c)	C44		48						
		C42	EN ISO 3651/2 - A:OK D51	C50	C51	C52	C53	C54	C55	C56

Internal cleanliness: A: B: C: D: C57

Location of the sample (1)
Emplacement de l'échantillon
Lage des Probenabschnittes
1. Front - Début - Anfang
2. Back - Fin - Ende
3. Middle - Milieu - Mitte
C01

Direction of the test pieces (2)
Orientation des éprouvettes
Probenrichtung
T. Transverse - Travers - Quer
L. Longitudinal - Long - Laengs
C02

The delivery is in accordance with the order
La fourniture est conforme aux exigences de la commande
Die lieferung entspricht den Bestellbedingungen Z01

Packing list
Avis d'expédition
LieferscheinNummer **2019033708-20076** A10

Marking, inspection and measurement : without objection
Contrôle de marquage, d'aspect et de dimensions : satisfaisants
Pruefung der Stempelung, des Oberflaechenaspekts und der Abmessungen : ohne Beanstandung D01

Organisation inspection
Organisme et/ou service contrôle
Ueberwachungsabteilung A05

Quality Department

26/3/2019

The inspector
Le responsable
Der Werkssachverstaendige **D. Raemaekers** Z02

ZSQ701 - PS5

This to declare that the material as described in here as been cut to :
LAM.316L 3000X1500X2,5 2B Lenght: 3000,000
and remarked with steelgrade, heat n°, workinspector's stamp CC

Seriale Certificato 00000000000000393931 File R:\A0002\00000000000000393931_ART_ICOL_10NA03501000044.TIF

aperam

Correspondance address
Adresse de correspondance - Adresse für briefwechsel
Swinnenwijerweg 5, Poort Genk 7523
3600 Genk, Belgium CE01

Annex to certificate 19K0014745-01 V01
Annexe du CCPU
Anlage Zum Zeugnis CE02

Certificate
CCPU - Zeugnis
19K0014745-CE V01 CE05

Certificate of Production Control Number
Numéro du certificat de contrôle de la production
Zeugnisnummer von Produktionskontrolle
0036-CPD-43-2011 CE03

CE 0036 CE06

Year 11
Année
Jahr CE04

Manufacturer's works order number
N° de la commande usine productrice
Werksauftragsnummer
80485937/02-20076/010/02 CE07

Purchaser and/or consignee
Client et/ou destinataire
Besteller und/oder Empfaenger
OIKI ACCIAI INOSSIDABILI SPA
VIA PARADICINA 95/A
43100 PARMA
ITALIE CE08

Purchaser's order number
N° de commande client
Kundenbestellnummer
ORD. 29- MARZO CE09

Customer article number
N° d'article client
Artikelnummer des Kundes
10NA03501000055 CE10

Identification of the product
Identification du produit - Identifizierung des Erzeugnisses

Dimensions
Dimensions - Abmessungen

Coil n°	Thickness	Width	Length
N° de bobine - Band Nr	Epaisseur - Dicke	Largeur - Breite	Longueur - Laenge
90710826 CE11	2,50 mm CE12	1500,00 mm CE13	CE14

Stainless steel / Acier inoxydable / Rostfreier Stahl CE15

EN10088-4 CE16

Intended uses : building constructions or civil engineering
Usages prévus : construction immobilière ou génie civil
Vorgesehene Verwendungen : Hochbauten und Ingenieurbauwerke CE17

Declaration of performance :
Déclaration des performances : DOP.Nr.GNK.08.01/GNK.10.01
Leistungserklärung :
DoP available on website Aperam : www.aperam.com/europe/news-publications/documentation/certifications/approvals CE18

Steel
Acier 1.4404/1.4401
Werkstoff CE19

Cold rolled
Laminé à froid
Kaltgewalzt CE20

Coil / bobine / Band CE21

Elongation / Allongement / Bruchdehnung
Tensile strength / Résistance à la traction / Zugfestigkeit
Yield strength / Limite d'élasticité / Dehngrenze
Impact strength / Résistance au choc / Kerbschlagzähigkeit
Weldability / Aptitude au soudage / Schweisseignung
Durability / Durabilité / Dauerhaftigkeit
Characteristics expressed as indicated in the above mentioned DOP
Tolerances on dimension and shape / Tolérances sur les dimensions et sur forme / Grenzabmasse unf Formtoleranzen : EN ISO 9445 CE22

Regulated substance : no performance determined
Substance réglementée : aucune performance déterminée
Regulierter Stoff: keine Leistung festgestellt CE23

This to declare that the material as described in here as been cut to :
LAM.316L 3000X1500X2,5 2B Lenght: 3000,000
and remarked with steelgrade, heat n°, workinspector's stamp CC

A04

aperam

Correspondentieadres:
Aperam Genk
Swinnenwijerweg 5, Poort Genk 7523
3600 Genk, Belgium
Tel. +32 (0)89 30 21 11

A01

MILL CERTIFICATE BS EN 10204/3.1
CERTIFICAT DE RECEPTION NF EN 10204/3.1
ABNAHMEPRUEFZEUGNIS DIN EN 10204/3.1

A02

Certified acc.PED 2014/68/EC Annex I § 4.3 by Certification Body 0036 of TUV SUD Industrie Service GmbH with cert.No..314/2007/MUC.Renounced of counter signature agreed byTUV SÜD (9/5/2007).Approved acc.AD 2000-Merkblatt W0/TRD 100 by TÜV SÜD Industrie Service GmbH.Confirmation letter from TÜVSÜD Industrie Service GmbH of 07/05/2010 about the uniformity of coils acc.AD2000 W2 §4.1.1

Tech.Req.:AD 2000 W2 -- AD 2000 W10 -- EN 13445-2

Z05

N-Nr-N 17K0031685-04 V01

A03

«МОДУС-СВ» Ідентифікаційний код 38746814 №2

Manufacturer's works order number
N° de la commande usine productrice
Werksauftragsnummer
80370087/04-32082/685/04

A08

Surveyor's mark
Cachet de l'expert
Stempel des
Werkssachverständigen
GNKI

Z03

Purchaser and/or consignee
Client et/ou destinataire
Besteller und/oder Empfaenger

SARITAS Celik San. ve Tic. A.S.
Barbaros Mah Begonya sok.Nida

34746 ATASEHIR ISTANBUL
TURKEY

A06

Purchaser's order number
N° de commande client
Kundenbestellnummer
2017004

A07

Product - Produit - Erzeugnis
COIL, COLD ROLLED, FINISH 2 B
COIL, LAMINE A FROID, FINI 2 B
COIL,KALTGEWALZT,GEGLUEHT+GEBEIZT,LEICHT NACHGEWALZT

B01

Customer article number
N.article client
Artikelnummer des Kunden

A09

Steel designation
Désignation de l'acier
Stahlbezeichnung

B02

EN 10028-7-2008 1.4307 / 1.4301
ASTM A 240-2016 TYPE 304L / 304
ASME SA 240-2015 TYPE 304L / 304

Finish
Présentation
Ausfuehrung
2B
2B
2B

Steelmaking process
Mode d'élaboration de l'acier - Stahlherstellungverfahren
Prod.proces: Electric arc furnace - VOD/AOD - Continuous casting
Proc.fabric.: Four à arc - VOD/AOD - Coulée continue
Fertigungsablauf: Elektro-Ofen - VOD/AOD - Stranggussanlage

C70

Any supplementary requirements
Prescriptions supplémentaires - Zusätzliche Anforderungen

B03

Product delivery condition
Etat de livraison du produit - Lieferzustand

Solution treated:
Hypertrempe: 1050 °C
Loesungsgegl+abgeschreckt:

Forced air-water/air forcé-eau
Geblnese Luft-Wasser

B04

ASME-CODE SECT.2 PART A // NACE MR 0175 / ISO 15156-1 / ISO 15156-3 -- NACE MR 0103 // ASTM A480 / A480M -- ASME SA480 /SA480M // CORR. TEST: ASTM A262-E OK // CHARPY V IMPACT STRENGTH TEST (EN 10028-7) : MIN60J AT -196°C

Z06

Identification of the product
Identification du produit - Identifizierung des Erzeugnisses
MELTED IN BELGIUM, MADE IN BELGIUM

B07

Dimensions
Dimensions - Abmessungen

Thickness B09	Width B10	Length B11
Epaisseur - Staerke	Largeur - Breite	Longueur - Laenge
6.00 mm	2000.00 mm	

Number of pieces B08
Nb de pièces - Stueckzahl: 1

Net weight B13
Poids net - netto Gewicht: 19770 KG

Coil n.	Heat n.
N.Bobine - Band Nr.	N.Coulée - Schmelz Nr.
72010848	720108

CHEMICAL ANALYSIS - ANALYSE CHIMIQUE - CHEMISCHE ZUSAMMENSETZUNG

	C	Si	Mn	Ni	Cr	Mo	Ti	N	S	P						
Required -Exigé %mini				8.00	17.50											
Anforderung %maxi	0.030	0.75	2.00	10.50	19.50			0.100	0.015	0.045						
Cast Analysis	0.028	0.42	1.54	8.03	18.05			0.075	0.003	0.030						
Analyse coulee																
Analyse Schmelze	C71	C72	C73	C74	C75	C76	C77	C78	C79	C80	C81	C82	C83	C84	C85	C86

D52

Positive material identification carried out : OK
Tests de vérification de la conformité de la nuance fournie : OK
Verwechslungpruefung wurde durchgefuehrt : OK

C04

C93

MECHANICAL PROPERTIES - PROPRIETES MECANIQUES - MECHANISCHE WERTE EN ISO 6892-1 B / A-SA 370

C20

Room temperature - Température ambiante - Raumtemperatur

Test temperature (°C) :

C03

Location (1)	Direction (2)		Yield or proof strength Limite d'elasticité Dehngrenze MPa		Tensile Strength Résistance à la traction Zugfestigkeit MPa	Elongation after fracture Allongement après rupt. Bruchdehnung %		Hardness Durete Haerte	Yield or proof strength Limite d'elasticité Dehngrenze MPa		Tensile str. Resist. MPa Zugfestigkeit	Elongation % Allongement Bruchdehnung
		Required Exigé Anforderung	Rp0,2%	Rp1%	Rm	A5	50mm	HRBW	Rp0,2%	Rp1%	Rm	A5
		mini	230	260	540	45	45	92				
		maxi			700							
1	T	Obtained Obtenu Ergebnisse	302	332	632	56	55	89				
2								89				
			C11	C14	C12	C13	C15	C31	C16	C17	C18	C19

Impact strength test Essai de résilience Kerbschlagzaehigkeitstest	Corrosion test Test de corrosion Korrosionstest	E0.2(T)/R(T) %						
C40 ((e) C44	EN ISO 3651/2 - A:OK	47						
C42	D51	C50	C51	C52	C53	C54	C55	C05

Internal cleanliness A: B: C: D: C57

Location of the sample (1)
Emplacement de l'échantillon
Lage des Probenabschnittes
1. Front - Début - Anfang
2. Back - Fin - Ende
3. Middle - Milieu - Mitte

C01

Direction of the test pieces (2)
Orientation des éprouvettes
Probenrichtung
T. Transverse - Travers - Quer
L. Longitudinal - Long - Laengs

C02

The delivery is in accordance with the order
La fourniture est conforme aux exigences de la commande
Die lieferung entspricht den Bestellbedingungen

Z01

Packing list
Avis d'expédition
LieferscheinNummer
170700039-32082

A10

Marking, inspection and measurement : without objection
Contrôle de marquage, d'aspect et de dimensions : satisfaisants
Pruefung der Stempelung, des Oberflaechenaspekts und der Abmessungen : ohne Beanstandung

D01

Organisation inspection
Organisme et/ou service contrôle
Ueberwachungsabteilung

A05

Quality Department

10/7/2017

The inspector
Le responsable
Der Werkssachverstaendige
D. Raemaekers

Z02

ZSQ701 - PS5

outokumpu
high performance stainless steel

CERTIFICATE - ZEUGNIS - CERTIFICAT

EN 10204-3.1
2455255-EN repl. 2455187

Business Unit / QCM: Avesta Works / Johan Nordström
Date Datum Date: 18-Aug-2017
Load, Lading, Charge No: TR/156006
Acknowledged ID, Bestätigung, Commande n°: 6610/300440927

Invoice No. 6610/1000589092 Page 1/1

Your ref. Ihre Ref., Votre ref: mail Shekar.

Buyer, Besteller, Acheteur:
SARITAS CELIK SANAYI VE TICARET AS
Barbaros Mah. Begonya Sok. No:3
Nidakule Kat:25, Atasehir
TR 34746, Istanbul (Anatolia)
TURKEY

Consignee, Empfänger, Lieu de livraison:
SARITAS CELIK SANAYI VE TICARET AS

Requirements, Anforderungen, Exigences:
ASTM A 240M-16a
ASME BPVC SEC II PART A SA-240/SA-240M 2015
EN 10088-2:2014
EN 10028-7:2016
AD 2000 W2, W10 & EN 10028-7
NACE MR0175 / ISO 15156-3:2015
NACE MR0103 / ISO 17945:2015
EN ISO 9445 / ASTM A 480

Mark of Manufacturer	Process	Inspector's stamp	Grade, Werkstoff, Nuance
outokumpu	E+AOD	AJA	Outokumpu Core 304L/4307 TYPE 304 1.4301

Product, Erzeugnisform, Produit: Stainless Steel Cold Rolled, Coil
finish 2B, cut edge

Line Reihe Ligne	Item Position Poste	Heat-Lot No Schmelze-Lot Nr Coulee n° - Lot No	Size Abmessungen Dimensions	Pieces Stückzahl Nombre	Quantity / Unit Menge / Einheit Quantité / Unité
1	6	572979-003	5,00 X 2000 mm	1	20010 KG

Chemical composition - Chemische Zusammensetzung - Composition chimiques

	C	Si	Mn	P	S	Cr	Ni	Mo	Ti	Nb	Cu	Co	N
Heat	.016	.31	1.14	.033	.001	18.29	8.09	.42	.004	.003	.37	.170	.067

Radioactive contamination check acc. IAEA recommendations: Approved

Test results - Prüfergebnisse - Results dessus (1N/mm² = 1 MPa) F = Front - Anfan - Debut B = Back - Ende - Fin T = Transverse - Quer - Travers

Test Ref	Temp °C	RP 0.2 N/MM2	RP 1.0 N/MM2	RM N/MM2	A5 %	2" %	HB HB
Min	+20	230	260	540	45	40	
Max				750			201
F T	+20	334	373	649	53	53	183
B T		324	363	642	56	55	183

Material conforms to NACE MR0103 in supplied condition
Material conforms to NACE MR0175/ISO 15156 in supplied condition
Corrosion acc. ASTM A 262-E, EN ISO 3651-2A: Approved
Heat treatment / Solution annealed: Material temp minimum 1040 °C / Quenched (forced air + water)
Steel grade verification (PMI-spectroscopic): Approved
Marking, visual insp. and gauge measurement: Approved
Certified acc. Pressure Equipment Directive (2014/68/EU) by TÜV CERT-Certification body
for pressure equipment of the TÜV NORD Systems; notified body, reg-no. 0045.

Outokumpu Stainless AB
Business Area Europe
BOX 74, S-774 22 AVESTA
SWEDEN
Regoffice: Stockholm SWEDEN, Regno: 556001-8748
Telephone: + 46 (0)226 811 75
Fax: + 46 (0)226 810 46
V.A.T no: SE556001874801

This material is found to comply with order requirements

Mats Hjelm
Authorized Inspector

A04

aperam

Correspondentieadres:
Aperam Genk
Swinnenwijerweg 5, Poort Genk 7523
3600 Genk, Belgium
Tel. +32 (0)89 30 21 11

A01

MILL CERTIFICATE BS EN 10204/3.1
CERTIFICAT DE RECEPTION NF EN 10204/3.1
ABNAHMEPRUEFZEUGNIS DIN EN 10204/3.1

A02

Certified acc.PED 2014/68/EU Annex I § 4.3 by Certification Body 0036 of TUV SUD Industrie Service GmbH with cert.No.:314/2007/MUC.Renounced of counter signature agreed byTÜV SÜD (9/5/2007).Approved acc.AD 2000-Merkblatt W0/TRD 100 by TÜV SÜD Industrie Service GmbH.Confirmation letter from TÜVSÜD Industrie Service GmbH of 07/05/2010 about the uniformity of coils acc.AD2000 W2 §4.1.1

Tech.Req.:AD 2000 W2 -- AD 2000 W10 -- EN 13445-2

Z05

N-Nr-N **19K0007473-01 V01** A03

Manufacturer's works order number
N° de la commande usine productrice
Werksauftragsnummer
80490687/03-59734/Q90/03
A08

Surveyor's mark
Cachet de l'expert
Stempel des
Werkssachverstaendigen
GNK1
Z03

Purchaser and/or consignee
Client et/ou destinataire
Besteller und/oder Empfaenger

APERAM SS&S POLAND SP. Z.O.O.
ul. H. Krupanka 97

41-103 SIEMIANOWICE SLASKIE
POLOGNE

A06

Purchaser's order number
N° de commande client
Kundenbestellnummer
902700242
A07

Product - Produit - Erzeugnis
COILS, HOT ROLLED, ANNEALED AND PICKLED
COILS, LAMINE A CHAUD, RECUITS + DECAPE
COILS, WARMGEWALZT, GEGLUEHT UND GEBEIZT
B01

Customer article number
N.article client
Artikelnummer des Kunden
ART030091
A09

Steel designation B02
Désignation de l'acier
Stahlbezeichnung

EN 10028-7-2016 1.4307 / 1.4301
EN 10088-2-2014 1.4307 / 1.4301
ASTM A 240-2017 TYPE 304L / 304
ASME SA 240-2017 TYPE 304L / 304
EN 10088-4-2009 1.4307 / 1.4301

Finish
Présentation
Ausfuehrung

1D
1D
NO 1
NO 1
1D

Steelmaking process C70
Mode d'élaboration de l'acier - Stahlherstellungverfahren
Prod.proces: Electric arc furnace - VOD/AOD - Continuous casting
Proc.fabric.: Four à arc - VOD/AOD - Coulée continue
Fertigungsablauf: Elektro-Ofen - VOD/AOD - Stranggussanlage

Any supplementary requirements B03
Prescriptions supplémentaires - Zusätzliche Anforderungen

Product delivery condition
Etat de livraison du produit - Lieferzustand

Solution treated:
Hypertrempe: **1050 °C**
Loesungsgegl+abgeschreckt:

Forced air-water/air forcé-eau
Geblaese Luft-Wasser B04

ASME-CODE SECT.2 PART A // NACE MR 0175 / ISO 15156-1 / ISO 15156-3 -- NACE MR 0103 // ASTM A480 / A480M -- ASME SA480 /SA480M // CORR. TEST: ASTM A262-E: OK // CORROSION INTERGRANULAIRE SELON ISO3651/2:OK

Z06

Identification of the product B07
Identification du produit - Identifizierung des Erzeugnisses
MELTED IN BELGIUM, MADE IN BELGIUM

Coil n.
N.Bobine - Band Nr.
90209530

Heat n.
N.Coulée - Schmelz Nr.
902095

Dimensions
Dimensions - Abmessungen

Thickness B09
Epaisseur - Staerke
10.00 mm

Width B10
Largeur - Breite
1000.00 mm

Length B11
Longueur - Laenge

Number of pieces B08
Nb de pièces - Stueckzahl
1

Net weight B13
Poids net - netto Gewicht
18210 KG

CHEMICAL ANALYSIS - ANALYSE CHIMIQUE - CHEMISCHE ZUSAMMENSETZUNG

	C	Si	Mn	Ni	Cr	Mo	Ti	N	S	P						
Required -Exigé %mini				8.00	17.50											
Anforderung. %maxi	0.030	0.75	2.00	10.50	19.50			0.100	0.015	0.045						
Cast Analysis	0.028	0.46	1.42	8.04	18.09			0.065	0.003	0.032						
Analyse coulee																
Analyse Schmelze	C71	C72	C73	C74	C75	C76	C77	C78	C79	C80	C81	C82	C83	C84	C85	C86

Positive material identification carried out : OK
Tests de vérification de la conformité de la nuance fournie : OK
Verwechslungpruefung wurde durchgefuehrt : OK
C04 C93 D52

Location (1)

MECHANICAL PROPERTIES - PROPRIETES MECANIQUES - MECHANISCHE WERTE EN ISO 6892-1 B / A-SA 370 C20

Room temperature - Température ambiante - Raumtemperatur | Test temperature (°C) : C03

Location (1)	Direction (2)		Yield or proof strength Limite d'élasticité Dehngrenze MPa		Tensile Strength Résistance à la traction Zugfestigkeit MPa	Elongation after fracture Allongement après rupt. Bruchdehnung %		Hardness Dureté Haerte	Yield or proof strength Limite d'élasticité Dehngrenze MPa		Tensile str. Résist. MPa Zugfestigkeit	Elongation % Allongement. Bruchdehnung
			Rp0.2%	Rp1%	Rm	A5	50mm	HRBW	Rp0.2%	Rp1%	Rm	A5
		Required Exigé Anforderung mini	210	250	520	45	45					
		maxi			700			92				
1	T	Obtained Obtenu Ergebnisse	330	369	612	54	57	86				
2								89				
			C11	C14	C12	C13	C15	C31	C16	C17	C18	C19

Impact strength test Essai de résilience Kerbschlagzaehigkeitstest			Corrosion test Test de corrosion Korrosionstest	E0.2(T)/R(T) %						
C40	t(°c)	C44		53						
		C42	EN ISO 3651/2 - A:OK D51	C50	C51	C52	C53	C54	C55	C05
				Internal cleanliness:			A:	B:	C:	D: C57

Location of the sample (1)
Emplacement de l'échantillon
Lage des Probenabschnittes
1. Front - Début - Anfang
2. Back - Fin - Ende
3. Middle - Milieu - Mitte
C01

Direction of the test pieces (2)
Orientation des éprouvettes
Probenrichtung
T. Transverse - Travers - Quer
L. Longitudinal - Long - Laengs
C02

The delivery is in accordance with the order
La fourniture est conforme aux exigences de la commande
Die lieferung entspricht den Bestellbedingungen Z01

Packing list
Avis d'expédition **2019029210-20612**
LieferscheinNummer A10

Marking, inspection and measurement : without objection
Contrôle de marquage, d'aspect et de dimensions : satisfaisants
Pruefung der Stempelung, des Oberflaechenaspekts und der Abmessungen : ohne Beanstandung
D01

Organisation inspection
Organisme et/ou service contrôle
Ueberwachungsabteilung A05

Quality Department

12/2/2019

The inspector
Le responsable
Der Werkssachverstaendige
D. Raemaekers
Z02

ZSQ701 - PS5

Ilta Inox S.p.A.
Strada Statale 45 bis
26010 Robecco d'Oglio (CR) - Italia
Tel + 39 0372 9801
Fax + 39 0372 921538
e-mail:sales@ilta.arvedi.it
quality@ilta.arvedi.it
www.arvedi.it

TEST CERTIFICATE ACCORDING TO EN 10204(2005) 3.1 N°0000539951

ABNAHMEPRÜFZEUGNIS - CERTIFICAT D'ESSAIS - CERTIFICATO DI COLLAUDO Pag. 1di 1

Longitudinally laser welded tubes/Laser längsnahtgeschweisste rohre/Tubes soudes longitudinalement laser/Tubi saldati longitudinalmente laser

Customer: Besteller/Client/Cliente: UBC Logistyka Trans Sp. z o. o. ul. Bierutowska 57/59 51-317 Wroclaw	
Customer Order N°: 20180126 - Bestellung/Commande Client/Ordine Cliente	Mill's Ilta Inox N°: 0411069745 - 000090 # 0421077704 - 000080 WerksN°/N° référence Interne/Conferma ordine
Specifications: EN 10217-7: 2014 TC1 / /EN 10357: 2014 Anforderungen/Specifications/Specifiche / / CC	Tolerances: EN ISO 1127 D4/T3 Toleranzen/Tolérances/Tolleranze
Manufacturer's mark: iltainox Herstellerzeichen/Marque du fabricant/ Marchio del produttore Inspector's Stamp: A.C. Stempel des Sachverständigen/Poinçon de l'inspecteur/Punzone dell'ispettore	Marking: According to EN 10357 Kenzeichnung/Marquage/Marcatura

Item Pos. N°	DIMENSIONS Abmessungen Dimensions/Dimensioni	PIECES N° Stückzahl Pièces/Pezzi	METERS Meter Mètres/Metri	WEIGHT(kg) Gewicht/Poids Peso	GRADE Werkstoff/Nuance Materiale	STANDARD CODE Normbezeichnung Designation/Designazione	EXECUTION Ausführung Execution/Esecuzione
90	52.00 X 1.50 X 6000	61	366.00	667.000	TP.316L 1.4404 Z3 CND 17-12-02 UNS S31603	X2 CrNiMo 17-12-2	W2 b

Chemical analysis acc.to: ASTM A240/ EN 10088-2/EN 10028-7 Last Edition Schmelzanalyse/Chimique analyse/Analisi chimica
Steel making process :E/AOD Erschmelzungsart/Procédé d'elaboration/Procedimento di elaborazione acciaio

Item N°	Manufacturer Hersteller/Fabricant/Produttore	HEAT N° Schmelze/Coulée/Colata	% C	% Si	% S	% P	% Mn	% Cr	% Ni	% Mo	% Ti	% Co	% Cu	% N
90	.....	517195	0.022	0.520	0.0010	0.028	1.490	16.680	10.030	2.010	0.011	0.220	0.440	0.042

Mechanical test acc. to tab.: 6-7 EN 10217-7 Mechanische Prüfungen/Essais mécaniques/Caratteristiche meccaniche

Item Pos. N°	HEAT N° Schmelze Coulée Colata	HOMOLOG. Zulassung Omologation Omologazione	TEST Probe Eprouvette Provino n°		SPECIMEN SIZE Abmessung Probestab Dime. Eprouvette Dimensione provetta mm.	YIELD STRENGTH Streck-Dehngrenze Limite d'élasticité Limite di snervamento 0,2% N/mm² 1%		TENSILE STRENGTH Zugfestigkeit Résistance à traction Limite di rottura N/mm²	ELONGAT. Bruchdehnung Allongement Allungamento A5%	HARDNESS Haerte Dureté Durezza HB
REQUIREMENT Anforderungen/Exigences/Requisiti						>=190	>=225	490 - 690	>= 40.0	
90	517195		01	L	20 X 1.50	402	444	612	52.4	

Test Results Ergebnisse der Prufungen/Résultat des essais/Risultati delle prove

Heat treatment:	Wärmebehandlung/Traitement termique/Trattamento termico
Tecnological test: ===== / ===== / EN ISO 8492: OK / =====	Technologische Prüfung/Examen technologique/Prove tecnologiche
Residual Corrosion Test acc.to : ==========	Korrosionsfördernde Rückstäden/Essai residues corrosif/Prova residui corrosivi
Intergranular Corrosion Test acc.to: EN ISO 3651-2/A : OK	IK Beständigkeit/Essai corr.intergr./Prova di corrosione intergranulare
Non Destructive Test acc. to: EN ISO 10893-2/E1H: OK	Zerstörungsfreie Prüfung/Contrôle non destructif/Controllo non distruttivo
Leak Test/Hydrostatic test to: EN ISO 10893-1: OK	Dichtheitsprüfung/Essai d'étanchéité/Prova di tenuta
Uncorrect Material Test: carried out 100% no remarks	Verwechlungsprüfung/Essai P.M.I./Prova antimiscuglio
Visual and gauging control: no remarks	Besichtigung und Ausmessung/Contrôle visuel et dimensionel/Controllo visivo e dimensionale

Notes:

ROUGHNESS ON BASIC MATERIAL Ra Max. 0,8 micron. ROUGHNESS ON WELDING ZONE Ra Max. 1,6 micron. - Material fully conform to type: 1.4401/316

We certify that the delivered products comply with the specification of the order / Wir bestaetigen, dass die gelieferte Ware den Bestellvorschriften entspricht / Nous attestons que les produits livres sont conformes aux réferences de la commande / Noi attestiamo che il materiale spedito è conforme ai requisiti dell'ordine

Ing. Alessandro Canevari

Robecco d'Oglio, 07/05/2018
D

Mill's Inspector / Der Werksachverständige
Inspecteur de l'usine / Firma Ispettore

Arvedi

Steelcom Fittings Srl
PRODUZIONE CURVE E RACCORDI IN ACCIAIO INOX

Capitale Sociale € 3.000.000 Int. vers.
Società soggetta alla direzione e coordinamento di Acciaierie Valbruna S.p.a.
Sede Legale: Viale della Scienza, 25 - 36100 Vicenza
R.E.A.VI - 343246
C.F. Reg. Imp. e P.IVA / VAT IT 06616030968

STEELCOM FITTINGS

Rapporto di Prova 2.2 EN 10204

Test Report 2.2 EN 10204

Num. 2119/9	Welded Elbow 90° Dairy 316L Pickled ø 52,0 x 1,50 r= 70,0		
Prodotto / Product:	Curva Acciaio INOX / Stainless Steel Elbow		
Dimensioni / Dimensions	D= ø 52,0	R= 70,0	T= 1,50 Dima= D3
Tipo e Composizione Chimica / Heat Analisys	Certificato / Certificate 3.1 num : 2.119,00		
Norma di Riferimento / Standard	DIN 11852		
Marcatura / Marking	SF IT 316L / 1.4404 52,0 x 1,50 DIN 11852 W C. 515380		
Tipo Formatura / Forming	Formatura a freddo da tubo saldato / Cold forming from welded tube		
Protocollo interno / Internal Ref.	PVS 10253 - 11852		
Controllo Visivo /Visual Control	OK		
Controllo Dimensionale / Dimensional Testing	OK		
Controllo Marcatura / Material Identification	OK		
Toll. Dimensione / Dimension	ISO 2768 - C		
Toll. Spessore / Wall Thickness Toll. <= 4 (>4)			
Tolleranza Diametro / Diameter Toll.			
Ovalizzazione / Ovalization / Rugosità	1,5%	Rai <= 0,8 mm	Rac <= 1,6 mm

Cliente / Customer	UKRAINIAN BEER COMPANY - ARMATURA CO LTD.	
Opzioni di fornitura / Supply options	☐ SI ☒ NO	Rif. Ordine / Ref. Order: 2199 Del 13/06/2018
Conformità all'ordine/Conformity according to order	I prodotti sono conformi alle clausole d'ordine / The products comply with the terms of the order contract: OK	
Opzioni / Options		

It was applied specifications PVS 10253 - 11852 to certify that manufactured products are conformed to order requirements and all internal tests(dimensional and visival ones) are registered. If required a copy of control certificate could be provided. This report stand also for conforming declaration of products which are supplied with order and specification requirements.
We are approved according to international and european standars EN / ISO 9001 and 2014/68/UE annex 1 4.3 / AD 2000 W0

Stefania Formigoni
Il Resp UT

Data: 29/08/2018

STEELCOM FITTINGS
Steelcom Fittings Srl
PRODUZIONE CURVE E RACCORDI IN ACCIAIO INOX
Capitale Sociale € 3.000.000 int. vers.
Società soggetta alla direzione e coordinamento di Acciaierie Valbruna S.p.a.
Sede Legale: Viale della Scienza, 25 - 36100 Vicenza
R.E.A.VI - 343246
C.F. Reg. Imp. e P.IVA / VAT IT 06616030968

Certificato di Prova EN 10204 - 3.1

Inspection Certificate EN 10204 - 3.1

Attachment

Num. 3045/14 Attachment	Welded Elbow 90° Dairy 304L Standard Finish ø 28,0 x 1,50 r= 42,0				
Prodotto / Product:	Curva Acciaio INOX / Stainless Steel Elbow				
Dimensioni / Dimensions	D= ø 28,0	R= 42,0	1,50	Dima= D3	Type A
Tipo e Composizione Chimica / Heat Analisys	Certificato / Certificate 3.1 num : 3,045,00				
Norma di Riferimento / Standard	EN 10253-4 : 2008				
Marcatura / Marking	SF IT 304L / 1.4307 28,0 x 1,50 EN 10253-4 : 2008 W C. 0447387 A				
Tipo Formatura / Forming	Formatura a freddo da tubo saldato / Cold forming from welded tube				
Protocollo Interno / Internal Ref.	PVS 10253 - 4				
Controllo Visivo /Visual Control	OK				
Controllo Dimensionale / Dimensional Testing	OK				
Controllo Marcatura / Material Identification	OK				
Dimensione / Dimension / Toll.	F = ± 2 mm				
Toll. Spessore / Wall Thickness Toll. <= 4 (>4)	-12,5 %			+15%	
Tolleranza Diametro / Diameter Toll.	Class D2				
Ovalizzazione / Ovalization	D2				
Valori / Value	D= 0,00	T= 0,00	X= 0,00	F= 0,00	O%= 0,00
Cliente / Customer	MODUS-SV LLC				
Opzioni di fornitura / Supply options	☐ SI	☒ NO	Rif. Ordine / Ref. Order: 00000003893 Del 19/11/2018		
Conformità all'ordine/Conformity according to order	I prodotti sono conformi alle clausole d'ordine / The products comply with the terms of the order contract: OK				
Opzioni / Options					

In reference to 10253-4 paragraph 14.10, it was applied specifications PVS 10253 to certify that manufactured products are conformed to order requirements and all internal tests(dimensional and visival ones) are registered. If required a copy of control certificate could be provided. This report stand also for conforming declaration of products which are supplied with order and specification requirements.
We are approved according to international and european standars EN / ISO 9001 and 2014/68/UE annex 1 4.3 / AD 2000 W0

Data: 28/11/2018

Stefania Formigoni
Il Resp UT

ISOQAR 0026
Cert. Num. 5427
ISO 9001 OHSAS 18001

Steelcom Fittings Srl
Produzione Curve e Raccordi in Acciaio Inox
Via S. Romano 5/7 46035 Ostiglia (MN)
Tel. 0386 32300 / 32231
Fax 0386 32251
info@steelcomfittings.it

TÜV NORD
Cert. No.:
07-203-9080-WP-1958/15

Certified Quality Management System num. 5427
TESTING PROTOCOL VERIFICATION ON SUPPLY CONDITIONS IN CONFORMITY ACCORDING TO UNI EN 10253-4 attested by Isoquar PVS 10253-4

ISOQAR
Cert. Num. 5427/AD
PVS 10253-4

SIDERINOX

Siderinox S.p.a. Frazione Caselle 20081 Morimondo (MI) Italia
Ufficio Commerciale: Tel. 02 9498151 - Fax 02 949815250/251
Ufficio Amministrativo: Tel. 02 9498161 - Fax 02 949816350
Ufficio Spedizioni: Tel. 02 949816222 - Fax 02 949815350
Ufficio Acquisti : Tel. 02 949816345 - Fax 02 949816350
Casella e-mail: sx@siderinox.it Sito web: www.siderinox.it

Capitale Sociale Euro 3.300.000 i.v.
Cod. Fiscale e Reg. Imp. MI N. 01825510157
R.E.A. Milano N. 878116
Centro Meccanografico n. MI074282
Partita IVA 01825510157

«МОДУС-СВ»
AZIENDA CON SISTEMA DI GESTIONE QUALITÀ CERTIFICATO DA DNV GL = ISO 9001 =
38746814
№2

INSPECTION CERTIFICATE EN 10204 3.1 N° 509236 of 20.11.2017

Page 1 / 1

Purchaser MODUS - SV LLC

DDT	SIDERINOX order number	Customer's order
N 3399 of 20.11.2017	N 4139 of 16.11.2017	N of 16.11.2017

Product
Stainless steel round pipe Ø 28 x 1,5 mm AISI 304/304L brushed EN 10357 Longitudinally welded

Dimension	Steel type	Quantity (m)	Weight (kg)
28 x 1,5 mm	EN 1.4301/1.4307 / AISI 304/304L	1020	915

Production Norm	Rolling	Tolerances	Welding factor
EN 10357	Cold rolled	EN 10357 \ EN 10357	V=1

Marking MANUFACTURER'S MARK - DIMENSION - STEELGRADE - HEAT N. - PRODUCTION NORM - EXECUTION - E.C. INSPECTOR - WORK INSPEKTOR

Manufacturing process — Surface finishing W0b

CHEMICAL COMPOSITION

Heat	% C	%Mn	%P	% S	%Si	%Cr	% Ni	% Mo	% Ti	% N
	0,000 - 0,030	0,000 - 2,000	0,000 - 0,045	0,000 - 0,015	0,000 - 1,000	17,500 - 19,500	8,000 - 10,000	0,000 - 0,000	0,000 - 0,000	0,000 - 0,110
0526784	0,030	1,740	0,032	0,001	0,300	18,100	8,030			0,061

The chemical values refer to the certificate issued by the steel mill according to EN 10088 / 10028-7 / ASTM A 240 and stored at our office.

TEST RESULTS

* (D) Direction: (L) Longitudinal, (T) Transverse - ** (P) Position: (W) Welding, (M) Material

Test unit	Test Class	(D) *	(P) **	TENSILE TEST in N/mm²=MPa				HARDNESS
				Yield Strength		Tensile Strength	Elongation	
				Rp 0,2%	Rp 1%	Rm	A %	HRB
				195 -	230 -	500 - 740	40 -	
T17113241	TC1	L	M	257	341	620	47	
T17113274	TC1	L	M	258	344	623	47	

Visual inspection	OK	Drift expanding test		Sealing test	
		UNI EN ISO 8493	OK	UNI EN ISO 10893-1	OK
Check on dimensions	OK	Flattenning test		Non destructive Eddy Current test	
		UNI EN ISO 8492	OK	UNI EN ISO 10893-2	OK
Antimixing test	OK	Weld bend test		Intergranular corrosion test	
		N.P.	N.P.	EN ISO 3651-2	N. P.

Rugosità interna Ra max 0,8 µm-Saldatura Ra max 1,6 µm

WE CERTIFY THAT THE MATERIAL SUPPLIED COMPLIES WITH THE REQUIREMENTS AGREED ON THIS ORDER

Notes:

Cerifications:	Document issued by:	Document confirmed by:
UNI EN ISO 9001 Dir. PED 2014/68/UE AQUAP from Nr. 7293-06-TU to Nr 7298-06-TU Qualifications: WPS/WPAR: UNI EN ISO 15609-4/UNI EN ISO 15614-11 WLD: UNI EN ISO 14732 operator NDT: UNI EN ISO 9712 operator	D. Ricco M. Vendramel Quality engineering	O. Fiorentini Quality manager

Cert. Coll. - Rev. 5 - 10/17

AIR LIQUIDE WELDING FRANCE
13 Rue d'Epluches, Saint-Ouen l'Aumône
95315 Cergy Pontoise Cedex - France

Phone: +33134213333
Fax: +33134213130

SAF-FRO

Certificato di Prodotto / Product Certificate

Certificato N°:
Certificate n°:
ALW00136178-1

Ordine N°:
Order n°:

Bolla N°:
Delivery Note n°:

Cliente:
Customer:
ORION GROUP LTD
PARNYKOVA STR.1/5,

08136 KRIUKOVSHCYNA VILL. - KIEV
UKRAINE

Data:
Date:
05/08/2013

Quantità:
Quantity:

UM:
Unit:
KG

Designazione:
Trade name:
W000283449
INERTROD 316L 1.0X1000XTUB05

Lotto N°: / Batch n°:
12508049

Classificazione:
Classification:
AWS A5.9: ER316 L
EN ISO 14343-A: W19 12 3L

Si confermano le proprietà sotto riportate per i consumabili di saldatura da noi forniti

We confirm following properties for the welding filler metals delivered by us

Analisi chimica prodotto / Product chemical analysis (%):

In accordo a / According to EN 10204-3.1

C	Mn	Si	P	S	Cr	Ni	Mo	Cu	Fe WRC/FN
0.012	1.584	0.384	0.017	0.0065	18.454	12.266	2.55	0.097	7

Nb	N								
0.003	0.037								

Proprietà meccaniche del deposito / Weld metal mechanical properties:

In accordo a / According to EN 10204-2.2

Trattamento Termico Heat treatment	Test temp. °C	Snervamento Yield Strength Rp0,2 [N/mm²]	Trazione Tensile Strength Rm [N/mm²]	Allungamento Elongation A [%]	Durezza Hardness HB	Resilienza - Impact strength (Charpy-V)		
						Temp: °C	Joule	Media Average
Come Saldato as Welded	20	420	630	32		20 -196		80 60

Note:
Remarks:

Questo certificato è stato stampato da computer e non necessita di firma
This certificate is printed by computer and needs no signature

Quality Departement - Verona Unit
Piubello Andrea

Emesso da - issued by: Viola Roberto

AIR LIQUIDE WELDING

EN 13479:2004

CE 0035 16

ISO 9001:2008 DVS ZERT D-ZM-16083-01-00-ISO9001-2015.0048.001

ТОВ "ВІТАПОЛІС"

вул. Територія технікуму, буд. 16, м. Боярка,

Києво-Святошинський район, Київська область, 08152

Сертифікат якості № 1801-09

від 02.02.2018

відповідно до ДСТУ EN ISO 10204 3.1

Номер партії:	***316L-572865-16-34***

Замовник:	***ТОВ «ОРІОН.ГРУП»***

Додаткові вимоги замовника

Лист № _____
від "____"_____ 201__ р.

Найменування продукції	**Пруток**
Марка	**ХОРДА316L**
Діаметр	**1,6 мм**
Вага	**80 кг**
ДСТУ EN ISO 14343	**A-W 19 12 3 L**
AWS A5.9	**ER316L**
ГОСТ 2246-70	-

Випробування дроту на розтяг
R_m (МПа) -

Механічні випробування наплавленого металу

Випробування на розтяг			
R_m (Н/мм^2)	R_t (0,2) (Н/мм^2)	A (%)	Z (%)
-	-	-	-

Режим зварювання	Значення
Зварювальний струм, А	
Напруга на дузі, В	
Захисний газ/флюс	
Витрати газу, л/хв	
Виліт електроду, мм	
Просторове положення шва	
Температура між проходами, °С	

197/1

Випробування на удар, KV			
	Дж (+20°С)	Дж (-40°С)	Дж (-60°С)
1			
2			
3			
Δ			

Поверхня дроту згідно п. 3.26 ГОСТ 2246-70	-
Поверхня продукції згідно п. 5.2 ДСТУ EN ISO 544:2015	відповідає

Хімічний аналіз (масова частка, %)	C	Si	Mn	P	S	Cr	Ni	Cu	Mo	N	Al	V	W	Ti+Zr
Дроту/**прутка**	**0,010**	**0,37**	**1,87**	**0,012**	**0,009**	**18,25**	**11,66**	**0,14**	**2,90**	-	-	-	-	-
Наплавленого металу														

Випробувальна лабораторія ТОВ "ВІТАПОЛІС" (атестат акредитації НААУ №2Т1345) пропонує послуги з хімічного аналізу та механічних випробувань дроту зварювального та катанки

Інспектор з контролю якості продукції

02.02.2018р (дата) М.Г.Курдюмов

ТОВ «ВІТАПОЛІС» Відповідальність Технічний контроль ВТК - 02

МП

Б ТИ-09/1 Редакція 7

THE LINDE GROUP

Linde

ПрАТ «Лінде Газ Україна»
04209, м. Київ, вул. Лебединська, 3б
тел./факс (044) 507 23 69

ПАСПОРТ ЯКОСТІ № 06/3

Аргон газоподібний

Партія №: 06.06.19 Кількість: 12 балонів

Бандл №:

№ пп	Найменування показників	Вимоги ГОСТ 10157-79		Фактично з аналізу
		Вищий сорт	1-й сорт	
1	Об'ємна частка аргону,%, не менше	99,993	99,987	99,994
2	Об'ємна частка кисню,%, не більше	0,0007	0,002	0,0009
3	Об'ємна частка азоту,%, не більше	0,005	0,01	0,0007
4	Об'ємна частка водяної пари,%, не більше	0,0009	0,001	0,0008
	що відповідає температурі насичення аргону водяною парою при тиску 101,3 кПа, °С, не вище	-61	-58	-64
5	Об'ємна частка суми вуглецевовмісні з'єднання в перерахунку на CO_2,%, не більше	0,0005	0,001	0,0001

Аргон відповідає вимогам ГОСТ 10157-79
Використовується водень марки "Б".

ЛАБОРАТОРІЯ КФПРАТ "ЛІНДЕ ГАЗ УКРАЇНА"

Сорт: первый

Аніліз провів: Васт Дата: 06.06 2019 р.

EG1935/2004 – Konformitätserklärung

EC No. 1935/2004 – Declaration of Conformity

CE N° 1935/2004 - Déclaration de Conformité

ifm electronic gmbh

Friedrichstraße 1
45128 Essen
E-Mail: info@ifm.com
Internet: www.ifm.com

Hiermit bestätigt die ifm prover gmbh für die im folgenden aufgeführten Geräte mit Zubehör:	ifm prover gmbh hereby confirms for the units with accessories listed below:	Par la présente, ifm prover gmbh confirme pour les unités avec accessoires suivantes :
Drucksensoren:	**Pressure sensors:**	**Capteurs de pression :**
PF2053[1)3)], PF2054[1)3)], PF2056[1)3)], PF2057[1)3)], PF2058[1)3)], PF2609[1)3)], PF2652[1)3)], PF2653[1)3)], PF2654[1)3)], PF2656[1)3)], PF2657[1)3)], PF2658[1)3)], PG2734[1)3)], PG2789[1)3)], PG2793[1)3)], PG2794[1)3)], PG2795[1)3)], PG2796[1)3)], PG2797[1)3)], PG2798[1)3)], PG2799[1)3)], PG2889[1)3)], PG2893[1)3)], PG2894[1)3)], PG2895[1)3)], PG2896[1)3)], PG2897[1)3)], PG2898[1)3)], PG2899[1)3)], PH1706[1)3)4)], PI003A[1)3)], PI008A[1)3)], PI009A[1)3)], PI1093[1)3)], PI1094[1)3)], PI1095[1)3)], PI1096[1)3)], PI1097[1)3)], PI1098[1)3)], PI1099[1)3)], PI1689[1)3)], PI1693[1)3)], PI1694[1)3)], PI1695[1)3)], PI1696[1)3)], PI1697[1)3)], PI1698[1)3)], PI1699[1)3)], PI2093[1)3)], PI2094[1)3)], PI2095[1)3)], PI2096[1)3)], PI2097[1)3)], PI2098[1)3)], PI2099[1)3)], PI2203, PI2204, PI2205, PI2206, PI2207, PI2209, PI2214, PI2303, PI2304, PI2305, PI2306, PI2307, PI2309, PI2602[1)3)], PI2692[1)3)], PI2693[1)3)], PI2694[1)3)], PI2695[1)3)], PI2696[1)3)], PI2697[1)3)], PI2698[1)3)], PI2699[1)3)], PI2714[1)3)], PI2715[1)3)], PI2717[1)3)], PI2789[1)3)], PI2793[1)3)], PI2794[1)3)], PI2795[1)3)], PI2796[1)3)], PI2797[1)3)], PI2798[1)3)], PI2799[1)3)], PI2814[1)3)], PI2815[1)3)], PI2817[1)3)], PI2889[1)3)], PI2893[1)3)], PI2894[1)3)], PI2895[1)3)], PI2896[1)3)], PI2897[1)3)], PI2898[1)3)], PI2899[1)3)], PI7093[1)3)], PI7094[1)3)], PI7096[1)3)], PI7696[1)3)], PI7698[1)3)], PIM693[1)3)], PIM694[1)3)], PL2053[1)3)], PL2054[1)3)], PL2056[1)3)], PL2057[1)3)], PL2058[1)3)], PL2652[1)3)], PL2653[1)3)], PL2654[1)3)], PL2656[1)3)], PL2657[1)3)], PL2658[1)3)], PM1602[1)3)], PM1603[1)3)], PM1604[1)3)], PM1605[1)3)], PM1606[1)3)], PM1607[1)3)], PM1608[1)3)], PM1609[1)3)], PM1614[1)3)], PM1615[1)3)], PM1617[1)3)], PM1689[1)3)], PM1703[1)3)], PM1704[1)3)], PM1705[1)3)], PM1706[1)3)], PM1707[1)3)], PM1708[1)3)], PM1709[1)3)], PM1714[1)3)], PM1715[1)3)], PM1717[1)3)], PM1789[1)3)], PM2053[1)3)], PM2054[1)3)], PM2055[1)3)], PM2056[1)3)], PM2057[1)3)], PM2058[1)3)], PM2653[1)3)], PM2654[1)3)], PM2655[1)3)], PM2656[1)3)], PM2657[1)3)], PM2658[1)3)], PY1706[1)3)], PY9000[1)2)], PY9001[1)2)], PY9060[1)2)], PY9970		
Strömungssensoren:	**Flow sensors:**	**Capteurs de débit :**
SI6000, SI6100, SI6200, SI6600, SI6700, SI6800		
Füllstandssensoren:	**Level sensors:**	**Capteurs de niveau :**
LMT01A[5)], LMT03A[5)], LMT04A[5)], LMT100[5)], LMT102[5)], LMT104[2)5)], LMT105[2)5)], LMT110[5)], LMT121[5)], LMT202[5)], LMT302[5)], LR2750[5)], LR2759[5)]		
Prozeßadaptionen:	**Process adapters:**	**Adaptateurs process :**
E30013, E30052, E30053, E30054[2)], E30055, E30056, E30072, E30122, E30123[2)], E30124[4)], E30128, E30130, E30393, E30423, E30437[2)], E30438[2)],E33001, E33002, E33004, E33008, E33009, E33011, E33012, E33013, E33014, E33021, E33022, E33031, E33032, E33033, E33042, E33051, E33092, E33102, E33103, E33108, E33123, E33131, E33133, E33201, E33202, E33208, E33209, E33211, E33212, E33213, E33221, E33222, E33228, E33229, E33242, E33302, E33304, E33309, E33340, E33401, E33402, E33403, E33405, E33408, E33430, E33601, E33602, E33612, E33622, E33701, E33702, E33711, E33712, E33713, E33721, E33722, E33731, E33732, E43300, E43301, E43302, E43303, E43304, E43305, E43306, E43307, E43308, E43309, E43310, E43311, E43312, E43313, E43315, E43316, E43317, E43318, E43319, E43338[2)], E43339[2)], E43340, E43341, E43342, E43344, E43345, E43346, E43347, E43348, E43407		

unter Berücksichtigung der nachstehenden Verordnungen	taking into account the following regulations	en prenant en compte les règlements suivants
- Rahmen-Verordnung (EG) Nr. 1935/2004 über Materialien und Gegenstände, die dazu bestimmt sind, mit Lebensmitteln in Berührung zu kommen. - Verordnung (EG) Nr. 2023/2006 über gute Herstellpraxis für Materialien und Gegenstände, die dazu bestimmt sind, mit Lebensmitteln in Berührung zu kommen (GMP).	- Regulation (EC) No. 1935/2004 on materials and articles intended to come into contact with food. - Regulation (EC) No. 2023/2006 on good manufacturing practice for materials and articles intended to come into contact with food (GMP).	- Règlement cadre (CE) N° 1935/2004 concernant les matériaux et objets destinés à entrer en contact avec des denrées alimentaires. - Règlement (CE) N° 2023/2006 relatif aux bonnes pratiques de fabrication des matériaux et objets destinés à entrer en contact avec des denrées alimentaires (GMP).
dass die mit Lebensmittel in Kontakt stehenden Oberflächen bzw. Materialien, bestehend aus Edelstahl 316 L (1.4404 / 1.4435) und / oder einem der folgenden Grundstoffe 1. Keramik (Al_2O_3) [1] 2. Elastomer (FKM / EPDM) [2] 3. Kunststoff (PTFE) [3] 4. Kunststoff (PEEK-Dichtung) [4] 5. Kunststoff (PEEK-Sensorspitze) [5]	**that the surfaces and materials in contact with food, consisting of stainless steel 316 L (1.4404 / 1.4435) and/or one of the following basic materials** 1. ceramics (Al2O3) (1) 2. elastomer (FKM / EPDM) 2) 3. plastic (PTFE) 3) 4. plastic (PEEK seal) 4) 5. plastic (PEEK sensor tip) 5)	**que les surfaces / matériaux en contact avec les denrées alimentaires, composés d'acier inox 1.4404 / 1.4435 (316L) et / ou l'une des matières de base suivantes** 1. céramique (Al2O3) 1) 2. élastomère (FKM / EPDM) 2) 3. plastique (PTFE) 3) 4. plastique (joint PEEK) 4) 5. plastique (bout de sonde PEEK) 5)
auf folgenden Grundlagen - der Lieferantenbescheinigungen der Grundstoffhersteller - der Lieferantenbescheinigungen der Halbzeug- und Komponentenlieferanten - der Messungen unabhängiger Prüfinstitute - mathematischer Berechnungsmodelle auf Grundlage von Worst Case Szenarien mit der Annahme: kompletter Übergang der SML-relevanten Inhaltsstoffe in das Medium bei Erstkontakt	**on the following bases** - supplier declarations from the basic material manufacturers - supplier declarations from the suppliers of semi-finished products and components - measurements from independent testing institutes - mathematical calculation models on the basis of worst case scenarios with the assumption: complete migration of the SML (specific migration limit) relevant substances into the medium at initial contact	**sur les bases suivantes** - les déclarations des fournisseurs des fabricants de matières de base - les déclarations des fournisseurs de produits semi-finis et de composants - les mesures des organismes certificateurs indépendants - les modèles de calcul mathématiques basés sur les scénarios du pire avec la supposition : migration complète des substances relatives aux LMS (limites de migration spécifiques) vers le fluide lors du premier contact
den Anforderungen der zugrundeliegenden Verordnungen und Empfehlungen entsprechen.	**comply with the applicable regulations and recommendations.**	**correspondent aux exigences des règlements et recommandations applicables.**
Diese Bestätigung gilt für die von unseren Lieferanten nach strengen Qualitätskriterien bereitgestellten Werkstoffe. Die Prüfung der Eignung eines oder mehrerer der oben aufgeführten Materialien für den vorgesehenen Einsatzzweck obliegt dem Verwender, d.h. die ifm prover gmbh ist nicht verantwortlich für Qualitätsveränderungen des Lebensmittels, die durch Wechselwirkungen mit dem Werkstoff oder Anteilen desselben entstehen könnten. Es liegt somit in der Verantwortung des Anwenders zu entscheiden, ob seine spezifischen Formulierungen unter der beabsichtigten Verwendung die anwendbaren Gesetze erfüllen.	This confirmation applies to the materials provided by our suppliers in accordance with severe quality criteria. The user is responsible for testing the suitability of the units for the intended application, i.e. ifm prover gmbh is not responsible for changes in quality of the food which may be caused by interactions with materials or components of the materials. Thus the customer is responsible for deciding whether his specific phrasings regarding the intended application comply with the applicable laws.	Cette confirmation s'applique aux matières fournies par nos fournisseurs selon des critères stricts de qualité. Il appartient à l'utilisateur de vérifier qu'une ou plusieurs des matières figurant ci-dessus conviennent à l'utilisation prévue, i.e. ifm prover gmbh n'est pas responsable des changements de qualité de la denrée alimentaire qui pourraient se produire dus aux interactions avec des matières ou des parts de ces matières. Il appartient donc à l'utilisateur de décider si ses formulations spécifiques concernant l'utilisation prévue satisfont les lois applicables.

Tettnang, 12.12.18

.....

Hans Peter Müller
Managing Director

EG1935/2004 V1 2 / 2

FDA – Konformitätserklärung

FDA – Declaration of Conformity

Déclaration de conformité FDA

ifm electronic gmbh

Friedrichstraße 1
45128 Essen
E-Mail: info@ifm.com
Internet: www.ifm.com

Hiermit bestätigt die ifm prover gmbh für die im folgenden aufgeführten Geräte mit Zubehör:	ifm prover gmbh hereby confirms for the units with accessories listed below:	Par la présente, ifm prover gmbh confirme pour les unités avec accessoires suivantes :
1) Aseptoflex Vario Dichtkonzept:	1) Aseptoflex Vario sealing concept:	1) Concept d'étanchéité Aseptoflex Vario :
Drucksensorik:	Pressure sensors:	Capteurs de pression :
PG2734, PG2789, PG2793, PG2794, PG2795, PG2796, PG2797, PG2798, PG2799, PH1706, PI2714, PI2715, PI2717, PI2789, PI2793, PI2794, PI2795, PI2796, PI2797, PI2798, PI2799, PM1703, PM1704, PM1705, PM1706, PM1707, PM1708, PM1709, PM1714, PM1715, PM1717, PM1789, PY1706		
Strömungssensorik:	Flow sensors:	Capteurs de débit :
SI6600, SI6700, SI6800		
Füllstandssensoren:	Level sensors:	Capteurs de niveau :
LR2750, LR2759		
Prozessadaption:	Process adapters:	Adaptateurs process :
E30053, E30054, E30122, E30123, E30124, E30128, E30130, E33201, E33202, E33208, E33209, E33211, E33212, E33213, E33221, E33222, E33228, E33229, E33242, E33304, E33309, E33340, E33701, E33702, E33711, E33712, E33713, E33721, E33722, E33731, E33732		
2) Abdichtung über G1A-Dichtkonus:	2) Sealing via G1A sealing cone:	2) Etanchéité par cône d'étanchéité G1A :
Drucksensorik:	Pressure sensors:	Capteurs de pression :
PF2609, PF2652, PF2653, PF2654, PF2656, PF2657, PF2658, PG2889, PG2893, PG2894, PG2895, PG2896, PG2897, PG2898, PI1689, PI1693, PI1694, PI1695, PI1696, PI1697, PI1698, PI1699, PI2602, PI2692, PI2693, PI2694, PI2695, PI2696, PI2697, PI2698, PI2699, PI2814, PI2815, PI2817, PI2889, PI2893, PI2894, PI2895, PI2896, PI2897, PI2898, PI2899, PI7696, PIM693, PIM694, PL2652, PL2653, PL2654, PL2656, PL2657, PL2658, PM1602, PM1603, PM1604, PM1605, PM1606, PM1607, PM1608, PM1609, PM1614, PM1615, PM1617, PM1689, PM2653, PM2654, PM2655, PM2656, PM2657, PM2658, PY2692		

FDA V10 1 / 3

Prozessadaption:	Process adapters:	Adaptateurs process :
E30013, E30072, E30437, E30438, E33601, E33602, E33612, E33622		
3) Abdichtung über G1/2-Dichtkonus:	3) Sealing via G1/2 sealing cone	3) Etanchéité par cône d'étanchéité G1/2 :
Füllstandssensoren:	Level sensors:	Capteurs de niveau :
LMT01A, LMT03A, LMT04A, LMT100, LMT102, LMT104, LMT105, LMT110, LMT121		
Prozeßadaption:	Process adapters:	Adaptateurs process :
E30055, E30056, E30393, E33401, E33402, E33408, E33430, E43300, E43301, E43302, E43303, E43304, E43305, E43306, E43307, E43309, E43310, E43311, E43312, E43315, E43319, E43322, E43323, E43325, E43326, E43329, E43407		
4) Sonstige Baureihen:	4) Other series:	4) Autres séries :
Drucksensorik:	Pressure sensors:	Capteurs de pression :
PI003A, PI008A, PI009A, PI1093, PI1094, PI1095, PI1096, PI1097, PI1098, PI1099, PI2093, PI2094, PI2095, PI2096, PI2097, PI2098, PI2099, PI2214, PI7093, PI7094, PI7096, PIM093, PIM094, PI2993, PI2994, PI2995, PI2996, PI2997, PI7993, PF2053, PF2054, PF2056, PF2057, PF2058, PF2953, PF2954, PF2956, PF2957, PL2053, PL2054, PL2056, PL2057, PL2058, PM2053, PM2054, PM2055, PM2056, PM2057, PM2058, PMP04A, PMP06A, PMP07A, PMP095, PY9000, PY9001, PY9060, PY9070, PY9970		
Strömungssensorik:	Flow sensors:	Capteurs de débit :
SI6000, SI6100, SI6200		
Füllstandssensoren:	Level sensors:	Capteurs de niveau :
LMT202, LMT302		
Prozessadaption:	Process adapters:	Adaptateurs process :
E30052, E33001, E33002, E33004, E33008, E33009, E33011, E33012, E33013, E33014, E33021, E33022, E33031, E33032, E33033, E33042, E33051, E33092, E33102, E33103, E33108, E33123, E33131, E33133, E33403, E33405, E43338, E43339, E43340, E43341, E43342, E43343, E43344, E43345, E43346, E43347, E43348		
dass die mit Medium in Kontakt stehenden Oberflächen bzw. Materialien, bestehend aus Edelstahl 316 L (1.4404 / 1.4435) und / oder einem der folgenden Grundstoffe: - Keramik (Al_2O_3) - Elastomer (FKM / EPDM) - Kunststoff (PTFE / PEEK) u. a. auf Grundlage der Lieferantenbescheinigungen konform sind zu:	that the surfaces / materials in contact with the medium, consisting of stainless steel 316L (1.4404 / 1.4435) and / or one of the following basic materials: - ceramics (Al_2O_3) - elastomer (FKM / EPDM) - plastics (PTFE / PEEK) are, among others on the basis of supplier declarations, compliant with:	que les surfaces / matières en contact avec le fluide, composés d'acier inox 316L (1.4404 / 1.4435) et / ou l'une des matières de base suivantes : - céramique (Al_2O_3) - élastomère (FKM / EPDM) - plastique (PTFE / PEEK) sont, entre autre sur la base des déclarations des fournisseurs, conformes à:

FDA V10 2 / 3

	CFR Title 21 (FDA) § 186.1256 *bzw./or/ou* ***CFR Title 21 (FDA) § 177.2600*** *bzw./or/ou* ***CFR Title 21 (FDA) § 177.1550*** *bzw./or/ou* ***CFR Title 21 (FDA) § 177. 2415***	

Tettnang, 12.12.18

.....

Hans Peter Müller
Managing Director

Intertechnik Elze
GmbH & Co. KG

Wernher-von-Braun-Str. 1
31008 Elze

DEUTSCHLAND

Telefon:
national (0 50 68) 40 22
international +49 5068 4022

Telefax:
national (0 50 68) 22 44
international +49 5068 2244

E-Mail: info@ite.de
Homepage: www.ite.de

Volksbank Hildesheim
(BLZ 259 900 11) 1 001 396 200
BIC (Swift-Code): GENODEF1HIH
IBAN DE91 2599 0011 1001 3962 00

Deutsche Bank
(BLZ 259 700 74) 188 680
BIC (Swift-Code): DEUTDE2H259
IBAN DE10 2597 0074 0018 8680 00

Sitz Elze
Registergericht Hildesheim HRA 15038
Persönlich haftende Gesellschafterin
Intertechnik Elze Verwaltungs GmbH
Sitz Neusitz
Registergericht Ansbach HRB 3157
Geschäftsführer:
Dipl.-Ing. Ingo Nicolaus
Dipl.-Ing. Werner Rohde

USt-IdNr. DE 114/289/2
Steuer-Nr. 11/201/00701
Zoll-Nr. 2617137

KEOFITT A/S

Kullinggade 31

DK-5700 Svendborg

Elze, 25th. January 2016

EU Regulation 1935/2004

We hereby certifies that ITE supplies products in accordance with EU1935/2004.
The overall requirements regarding materials suitability for use in contact with foodstuff is considered fulfilled by suppliers *when* the material meets the requirements of FDA CFR21: 177.2600 (rubber) or 177.1550 (PTFE).
The below listet products are also in compliance with the criteria of the U.S. Pharmacopeia, Class VI, Section 88 Biological Reactivity Test, in Vivo.

At shipment, the parts are always labeled according to EU1935/2004, and, like all products from ITE, have full traceability by serial number.
FDA/USP products can be identified by the "5" at the end of part no.

With kind regards

ITE Intertechnik Elze GmbH

ITE
Intertechnik Elze GmbH & Co. KG
Wernher-von Braun-Strasse 1
31008 Elze / DEUTSCHLAND
FON: +49 5068 4022 · FAX: +49 5068 2244
MAIL: info@ite.de

Bernd Linker

Referring to Articles:
900074 (FD01-0157-025-105),
900087 (FD01-0094-025-105),
900091 (FD01-0221-050-155),
900092 (FD01-0475-050-155),
900093 (FD01-0729-091-155)

Following Articles are from Stainless Steel and are not regulated acc. EU 1935/2004
900075(FW13MHHSOE), 900076(FW16AMP-LF), 900086(FW13MHHMOF),
900094(FW16AMP-L3), 900095(FW16AMP-L2),

KEOFITT®
WORLD LEADERS IN STERILE SAMPLING™

EU – Declaration of Conformity

ATEX

Manufacturer
Keofitt A/S
Kullinggade 31
DK-5700 Svendborg
Denmark

declares on own responsibility that the construction the of following product:

Keofitt® sampling valve bodies
for M4, W9, W15, W25, Ingold and SESAME

for industrial use

are outside the scope of **EU directive 94/9/EC** and **2014/34/EU - ATEX**

through use of the following harmonized standard:

DS/EN 13463-1: 2009 – Non-electrical equipment for use in explosive atmospheres

- Labeling: The products should not be labeled

The chosen valve heads for the above-mentioned valve bodies determine the ATEX labelling.

The above-mentioned standard is only used to the extent to which it is relevant in relation to the use of the valve.

Svendborg, 5th September 2016

KEOFITT
WORLD LEADERS IN STERILE SAMPLING™
KEOFITT A/S • Kullinggade 31 • DK-5700 Svendborg
Phone +45 63 16 [illegible] • Fax +45 63 16 70 81
E-mail: info@keofitt.dk

Henrik L. Salomon
Managing director, Keofitt A/S

EN 13479:2004 CE 0035 16

ISO 9001:2008 DVS ZERT D-ZM-16083-01-00-ISO9001-2015.0048.001

ТОВ "ВІТАПОЛІС"

вул. Територія технікуму, буд. 16, м. Боярка,

Києво-Святошинський район, Київська область, 08152

Сертифікат якості № 1801-07

від 02.02.2018

відповідно до ДСТУ EN ISO 10204 3.1

Номер партії:	***316LSi-YX1702-675-12-12W***

Замовник:	***ТОВ «ОРІОН.ГРУП»***

Найменування продукції	**Пруток**
Марка	**ХОРДА316LSi**
Діаметр	**1,2 мм**
Вага	**40 кг**
ДСТУ EN ISO 14343	**A-W 19 12 3 LSi**
AWS A5.9	**ER316LSi**
ГОСТ 2246-70	-

Додаткові вимоги замовника

Лист № _____
від "____" _____ 201__ р.

Випробування дроту на розтяг
R_m (МПа) -

Механічні випробування наплавленого металу			
Випробування на розтяг			
R_m ($Н/мм^2$)	R_t (0,2) ($Н/мм^2$)	A (%)	Z (%)
-	-	-	-

Режим зварювання	Значення
Зварювальний струм, А	
Напруга на дузі, В	
Захисний газ/флюс	
Витрати газу, л/хв	
Виліт електроду, мм	
Просторове положення шва	
Температура між проходами, °С	

300/1

Випробування на удар, KV			
	Дж (+20°С)	Дж (-40°С)	Дж (-60°С)
1			
2			
3			
Δ			

Поверхня дроту згідно п. 3.26 ГОСТ 2246-70	-
Поверхня продукції згідно п. 5.2 ДСТУ EN ISO 544:2015	відповідає

Хімічний аналіз (масова частка, %)	C	Si	Mn	P	S	Cr	Ni	Cu	Mo	N	Al	V	W	Ti+Zr
Дроту/**прутка**	**0,016**	**0,82**	**1,57**	**0,019**	**0,006**	**18,21**	**11,39**	**0,15**	**2,82**	-	-	-	-	-
Наплавленого металу														

Випробувальна лабораторія ТОВ "ВІТАПОЛІС" (атестат акредитації НААУ №2Т1345) пропонує послуги з хімічного аналізу та механічних випробувань дроту зварювального та катанки

Інспектор з контролю якості продукції

02.02.2018р. (дата) М.Г.Курдюмов

ТОВ «ВІТАПОЛІС» Відповідальний за технічний контроль ВТК - 02

МП

Б ТИ-09/1 Редакція 7